Small Geared Motors / Gear Heads

Motors with Electromagnetic Brake

Features: Motor with an integrated electromagnetic brake, capable of high braking and position holding abilities.
The PACMTBW type includes an International Standards (UL, CE, CCC) compliant electromagnetic brake motor. For motor brackets, see P.1115

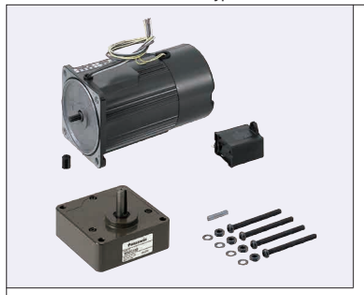

Type	
Motor	Gear Heads
(Single-phase) PACMB	(40W or lower) PACMGX
(3-Phase) PACMTB/PACMTBW	(60W or higher) PACMGZ

Accessory

Motor	Capacitor (Not available for 3-Phase Motor)
Gear Heads	Key (Not available for A60) Screws, Nuts, Washers (4 each)

Motors with Electromagnetic Brake

PACMB (Single-phase) **PACMTB** (3-Phase) **PACMTBW** (3-Phase / International Standards Compliant)

· 15W or lower

The drawing shows the gear head installed. The motor shaft is a gear shaft, not a plain motor shaft.

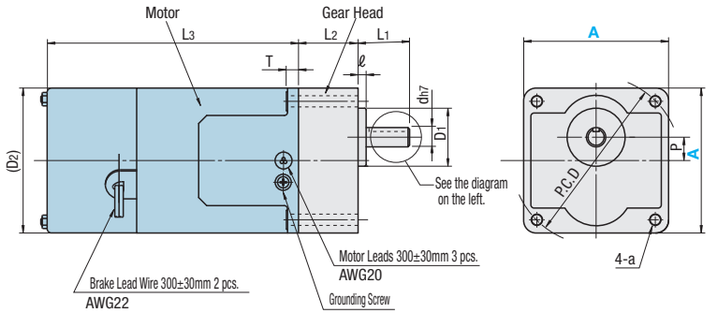

· 25W, 40W

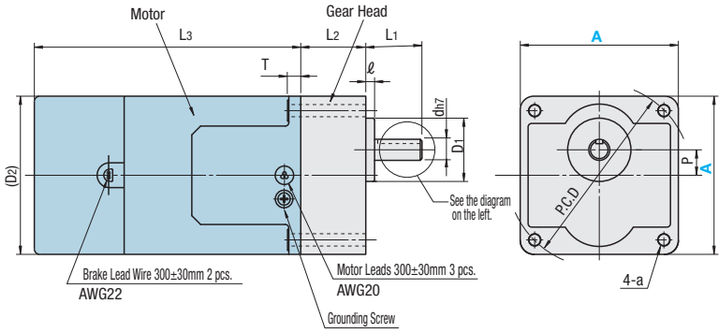

· 60W or higher

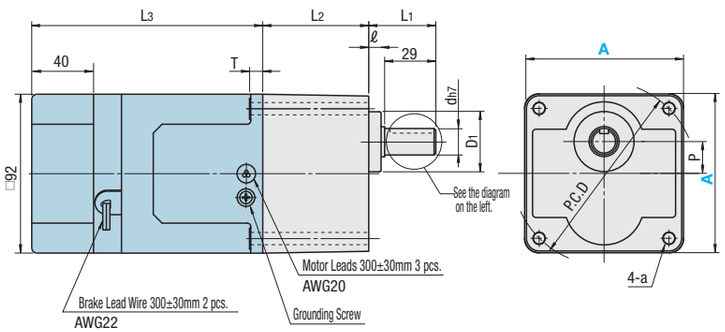

Gear Head Lubrication: Greasing

Gear Heads

PACMGX (for Motor Output 40W or lower)
PACMGZ (for Motor Output 60W or higher)

A60
Shaft Details

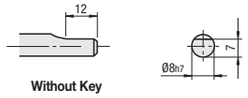

Without Key

A70, 80
Shaft Details

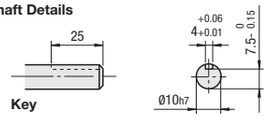

Key

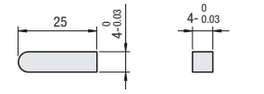

A90 (40W)
Shaft Details

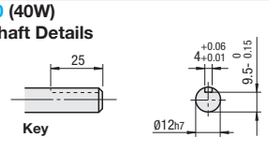

Key

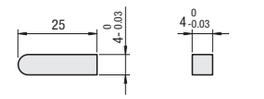

A90 (60W, 90W)
Shaft Details

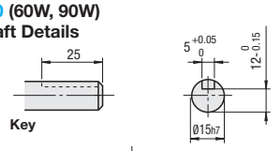

Key

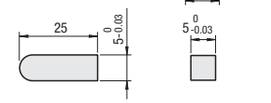

Capacitor
Single-phase Motor is included.

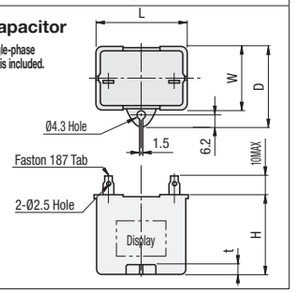

For transportation, installation, assembly, wiring, operating, and maintenances of motors, see the included manual.

Motors with Electromagnetic Brake

Part Number Type	A	Output (W)	Voltage (V)	d	D1	L1	L2*2	L3	ℓ	T	(D2)	P	a	P.C.D	Mass (kg) *2 Motor	Mass (kg) *2 Gear Heads	Unit Price PACMB	Unit Price PACMTB	Unit Price PACMTBW
PACMB *1PACMTB	60	6	100	8	25	32	26 (33)	114.5	6	7	65	10	4.5	70	0.85	0.24 (0.3)		-	-
			200															-	-
	70	15	100	10	30		30 (36)	119	5		74	15	5.5	82	1.1	0.38 (0.45)		-	-
			200															-	-
	80	25	100				30	128	6		86			94	1.8	0.6		-	-
			200																-
	90	40	100	12	36		37	151	5	7.5	95	18	6.5	104	2.8	0.8		-	-
			200																-
		60	100	15	34	38	60	168.5	7		92				3.1	1.4		-	-
			200																-
		90	100					183.5			92				3.7	1.4		-	-
			200																-
PACMTBW*3 (International Standards Compliant)	80	25	200 220/230	10	30	32	30	128	6	7	86	15	5.5	94	2.1	0.6	-	-	
	90	60	200 220/230	15	34	28	60	168.5	7	7.5	92	18	6.5	104	3.4	1.4	-	-	

*1. The 3-Phase Motors can be used at 220V. *2. The values in ( ) are weight and dimensions for gearheads with reduction ratio 30 or higher. *3. The type is 200, but can also be used at 220/230V.

Motor with Electromagnetic Brake (Single-phase) Rated for 30 minutes, Number of Poles: 4P

Part Number Type	A	Output (W)	Voltage (V)	50Hz Ratings Input (W)	50Hz Ratings Current (A)	50Hz Ratings Rotational Speed (r/min)	50Hz Ratings Torque N · m	50Hz Starting Current (A)	50Hz Starting Torque N · m	60Hz Ratings Input (W)	60Hz Ratings Current (A)	60Hz Ratings Rotational Speed (r/min)	60Hz Ratings Torque N · m	60Hz Starting Current (A)	60Hz Starting Torque N · m	Braking Input (W)	Braking Current (A)	Braking Static Friction Torque N · m	Capacitor μF
PACMB	60	6	100	22	0.22	1300	0.044	0.32	0.056	22	0.22	1600	0.035	0.32	0.056	4	0.04	0.049	3.5(200V)
			200	25	0.13	1300	0.044	0.17	0.056	25	0.13	1600	0.035	0.18	0.056	4	0.02	0.049	0.9(400V)
	70	15	100	36	0.36	1300	0.110	0.59	0.10	38	0.38	1600	0.088	0.57	0.10	4	0.05	0.078	6 (200V)
			200	38	0.18	1300	0.110	0.28	0.10	39	0.19	1600	0.088	0.28	0.10	4	0.03	0.078	1.5(400V)
	80	25	100	56	0.57	1300	0.19	1.0	0.20	56	0.56	1600	0.16	1.0	0.20	6	0.06	0.10	9.5(200V)
			200	56	0.29	1300	0.19	0.52	0.20	56	0.28	1600	0.16	0.51	0.20	6	0.03	0.10	2.4(400V)
	90	40	100	79	0.81	1300	0.29	1.7	0.32	80	0.81	1625	0.24	1.6	0.32	7	0.09	0.20	15 (210V)
			200	79	0.4	1300	0.29	0.85	0.32	80	0.41	1625	0.24	0.78	0.32	7	0.05	0.20	3.8(400V)
		60	100	127	1.3	1275	0.45	2.4	0.57	133	1.3	1600	0.36	2.4	0.57	7	0.09	0.39	25 (200V)
			200	127	0.65	1275	0.45	1.2	0.57	133	0.65	1600	0.36	1.2	0.57	7	0.05	0.39	6.2(375V)
		90	100	171	1.7	1225	0.70	2.8	0.68	181	1.9	1525	0.56	2.7	0.70	7	0.09	0.39	30 (200V)
			200	171	0.93	1225	0.70	1.4	0.68	181	0.96	1525	0.56	1.4	0.70	7	0.05	0.39	7.5(370V)

Motor with Electromagnetic Brake (3-Phase) Continuous Rating Number of Poles: 4P

The 3-Phase Motor can be used in 220V.

Part Number Type	A	Output (W)	Voltage (V)	Input Voltage (V)	50Hz Ratings Input (W)	50Hz Ratings Current (A)	50Hz Ratings Rotational Speed (r/min)	50Hz Ratings Torque N · m	50Hz Starting Current (A)	50Hz Starting Torque N · m	60Hz Ratings Input (W)	60Hz Ratings Current (A)	60Hz Ratings Rotational Speed (r/min)	60Hz Ratings Torque N · m	60Hz Starting Current (A)	60Hz Starting Torque N · m	Braking Input (W)	Braking Current (A)	Braking Static Friction Torque N · m
PACMTB	80	25	200	200	50	0.25	1350	0.18	0.62	0.54	47	0.22	1625	0.15	0.58	0.40	6	0.03	0.10
				220	54	0.27	1375	0.18	0.67	0.66	49	0.23	1650	0.15	0.64	0.50	6	0.03	0.10
	90	40		200	69	0.31	1350	0.28	0.90	0.72	68	0.29	1625	0.24	0.82	0.51	7	0.05	0.20
				220	70	0.32	1375	0.27	1.00	0.88	66	0.28	1675	0.23	0.91	0.63	7	0.05	0.20
		60		200	101	0.45	1350	0.42	1.3	1.0	96	0.41	1625	0.35	1.2	0.69	7	0.05	0.39
				220	103	0.46	1375	0.41	1.5	1.2	98	0.40	1650	0.34	1.3	0.87	7	0.05	0.39
		90		200	141	0.62	1350	0.63	2.0	1.6	137	0.56	1625	0.53	1.8	1.1	7	0.05	0.39
				220	143	0.65	1400	0.62	2.2	2.0	137	0.56	1650	0.52	2.0	1.4	7	0.05	0.39
PACMTBW (International Standards Compliant)	80	25	200 220/230	200 220/230	50	0.25	1350	0.18	0.62	0.54	47	0.22	1625	0.15	0.58	0.4	6	0.03	0.1
					-	-	-	-	-	-	49/50	0.23/0.24	1650/1675	0.14	0.64/0.65	0.5/0.54	7/8	0.04	0.1
	90	60	200 220/230	200 220/230	101	0.45	1350	0.42	1.3	1	96	0.41	1625	0.35	1.3	0.87	9	0.05	0.39
					-	-	-	-	-	-	98	0.4/0.41	1650/1675	0.35/0.34	1.3/1.4	0.87/1	11	0.06	0.39

Capacitor (Accessory)

Included with single-phase motors only.

A	Output (W)	Voltage (V)	L	W	D	H	t
60	6	100	39.5	16	26.5	30.5	4
		200	39.5	16.2	27	27	4
70	15	100	39.5	17.5	28	30.5	4
		200	39.5	22	32.5	32.5	4
80	25	100	39.5	22	32.5	30.5	4
		200	49.7	24	34.5	34.5	4
90	40	100	39.5	26.7	37	41	4
		200	50	26.7	37.5	38	4
	60	100	50.2	31	41	42	5
		200	50	30.5	41	41.5	4
	90	100	50.2	31	41	42	5
		200	50	34	45	45	6

Connection Diagram

(Single-phase)

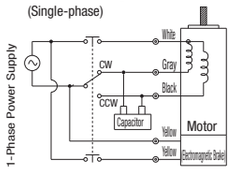

CW (Clockwise)

Rotates counterclockwise when switched to CCW position.

(3-Phase)

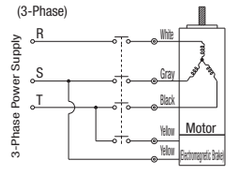

CCW (Counterclockwise)

Rotates clockwise if two of the White, Gray, and Black wires are switched.

Provide a spark suppression circuit (R_1+C_1) between the contacts.

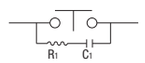

R_1=10~200Ω (1/4W or larger)
C_1=0.1~0.33μF
(125VAC or 250VAC)

Allowable Torque when Gear Heads are Mounted

The rotational speeds shown are based on synchronous operation speeds. Generally, the actual speeds may be 2 ~ 20% less than indicated value depending on load conditions.
Output shaft rotation direction is same as the motor for , others are reverse rotation.

Part Number Type	A	Output (W)	Reduction Ratio / Rotational Speed (r/min)		3	3.6	5	6	7.5	9	10	12.5	15	18	20	25	30	36	50	60	75	90	100	120	150	180
PACMGX	60	6	50Hz		500	416.7	300	250	200	166.7	150	120	100	83.3	75	60	50	41.7	30	25	20	16.7	15	12.5	10	8.3
			60Hz		600	500	360	300	240	200	180	144	120	100	90	72	60	50	36	30	24	20	18	15	12	10
			Allowable Torque (N · m)	50Hz	0.098	0.12	0.16	0.19	0.25	0.29	0.33	0.4	0.49	0.59	0.66	0.79	0.95	1.18	1.57	1.86	2.25	2.45				
				60Hz	0.081	0.098	0.13	0.16	0.21	0.25	0.26	0.33	0.4	0.49	0.53	0.66	0.79	0.95	1.27	1.57	1.86	2.25	2.45			
	70	15		50Hz	0.24	0.28	0.39	0.47	0.59	0.71	0.8	0.98	1.18	1.37	1.57	1.86	2.25	2.74	3.82	4.61	4.9					
				60Hz	0.2	0.24	0.32	0.39	0.49	0.59	0.66	0.81	0.98	1.18	1.27	1.57	1.86	2.25	3.23	3.82	4.8	4.9				
	80	25		50Hz	0.39	0.47	0.66	0.78	0.98	1.18	1.27	1.57	1.96	2.35	2.55	3.14	3.82	4.61	6.37	7.64	7.84					
				60Hz	0.32	0.39	0.55	0.66	0.81	0.98	1.08	1.27	1.57	1.96	2.06	2.65	3.14	3.82	5.29	6.37	7.84					
	90	40		50Hz	0.66	0.78	1.08	1.27	1.57	1.86	2.25	2.74	3.23	3.92	4.41	5.29	6.37	7.94	9.8							
				60Hz	0.55	0.66	0.9	1.08	1.27	1.57	1.76	2.25	2.74	3.23	3.53	4.41	5.29	6.37	8.82	9.8						
PACMGZ	90	60		50Hz	0.98	1.18	1.57	1.96	2.35	2.94	3.14	3.92	4.7	5.59	6.27	7.55	9.11	11	15.2	17.8	19.6					
				60Hz	0.78	0.98	1.37	1.57	1.96	2.35	2.65	3.33	3.92	4.7	5.29	6.47	7.55	9.11	12.6	15.2	19.6					
		90		50Hz	1.37	1.67	2.25	2.74	3.43	4.12	4.51	5.68	6.76	8.04	9.02	10.9	13	15.7	19.6							
				60Hz	1.18	1.37	1.86	2.25	2.84	3.43	3.72	4.7	5.68	6.76	7.55	9.21	10.9	13	18.3	19.6						

Gear Heads (for Motor Output of 40W or lower)

Part Number Type	A	Reduction Ratio Selection	Unit Price Reduction Ratio 3~18	20~36	50~180
PACMGX	60	3 3.6 5 6 7.5 9 10			
	70	12.5 15 18 20 25			
	80	30 36 50 60 75 90			
	90	100 120 150 180			

Gear Heads (for Motor Output of 60W or higher)

Part Number Type	A	Reduction Ratio Selection	Unit Price Reduction Ratio 3~9	10~18	20~60	75~180
PACMGZ	90	3 3.6 5 6 7.5 9 10				
		12.5 15 18 20 25				
		30 36 50 60 75 90				
		100 120 150 180				

Ordering Example

· Motors with Electromagnetic Brake: Part Number - Output (W) - Voltage (V)
PACMB80 - W25 - V100

· Gearheads: Part Number - Reduction Ratio
PACMGX80 - 50

Alterations P.1115
Excluding International Standards Compliant Products