Idler

Belt Backside Tensioning

Idler shafts (cantilever shafts) are selectable from P.881~906.
Tensioners can be selected from P.1555, P.1556.

Type		Material			Surface Treatment
No Flange	Flanged	Main Body	Flange	Bearing	
AFBD	AFDF	Aluminum Alloy	A5052	Steel	Clear Anodize
BFBD	BFDF	S45C Equivalent	SPCC		Black Oxide
MFBD	MFDF				Electroless Nickel Plating
SFBD	SFDF	SUS304		Stainless Steel	-

• Center Bearing

No Flange: AFBD BFBD MFBD SFBD

Flanged: AFDF BFDF MFDF SFDF

• Both Sides Bearing

No Flange: AFBD

Flanged: AFDF

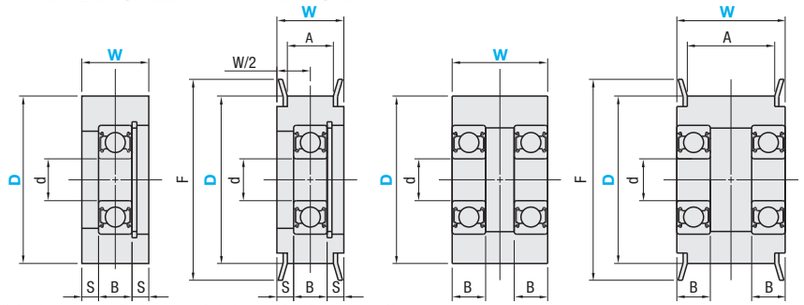

Bearings are press-fitted.

* Bearing Accuracy: JIS B1514 Class 0 (before press-fitting)

RoHS10

Center Bearing

Part Number Type	W	D	F	A	Applicable Belt Nominal Width inch	Applicable Belt Nominal Width mm	S	Bearing Dimensions No.	d	B	Retaining Ring AFBD MFBD SFBD AFDF MFDF SFDF	Retaining Ring BFBD BFDF	Unit Price No Flange AFBD	No Flange BFBD	No Flange MFBD	No Flange SFBD	Flanged AFDF	Flanged BFDF	Flanged MFDF	Flanged SFDF
No Flange AFBD BFBD MFBD SFBD Flanged AFDF BFDF MFDF SFDF	9	20	25	5	-	040	2.5	695ZZ	5	4	RTWS13	RTWN13		-	-	-		-	-	-
		25	30																	
	10	25	30	6	019	-	2.5	696ZZ	6	5	RTWS15	RTWN15		-	-	-		-	-	-
	11	25	30	7	-	060	3.0	696ZZ	6	5	RTWS15	RTWN15								
	11.5	25	30	7.5	025	-	3.25	696ZZ	6	5	RTWS15	RTWN15								
	14	30	35	9	031		4	698ZZ	8	6	RTWS19	RTWN19		-	-	-		-	-	-
	15	30	35	11	037	100	4.5	698ZZ	8	6	RTWS19	RTWN19								
	16	40	48				4	6000ZZ	10	8	RTWS26	RTWN26								
	19	30	36	14	050	-	6.5	698ZZ	8	6	RTWS19	RTWN19		-	-	-		-	-	-
		35	45				5.5	628ZZ	8	8	RTWS24	RTWN24								
		45	55				5	6200ZZ	10	9	RTWS30	RTWN30								
	22	35	45	17	-	150	7	6000ZZ	10	8	RTWS26	RTWN26		-	-	-		-	-	-
		45	55				6.5	6200ZZ	10	9	RTWS30	RTWN30								
	26	40	48	21	075	-	9	6000ZZ	10	8	RTWS26	RTWN26		-	-	-		-	-	-
		45	55				8.5	6200ZZ	10	9	RTWS30	RTWN30		-	-	-		-	-	-
		50	58				8.5		10											

Both Sides Bearing

Part Number Type	W	Nominal	D	F	A	Applicable Belt Nominal Width inch	Applicable Belt Nominal Width mm	Bearing Dimensions No.	d	B	Unit Price No Flange AFBD	Unit Price Flanged AFDF
No Flange AFBD Flanged AFDF	9	15	15	18	5	-	040	675ZZx2	5	2.5		
		20W	20	25				676ZZx2	6	3		
	11	15	15	18	7		060	675ZZx2	5	2.5		
		20	20	25				676ZZx2	6	3		
	11.5	15	15	18	7.5	025	-	675ZZx2	5	2.5		
		20	20	25				676ZZx2	6	3		
	15	20	20	25	11	037	100	686ZZx2	6	5		
		25	25	30				688ZZx2	8	5		
	19	25	25	32	14	050	-	688ZZx2	8	5		
		30W	30	36				688ZZx2	8	5		
	22	25	25	32	17	-	150	688ZZx2	8	5		
		35W	35	45				6000ZZx2	10	8		
	26	40W	40	48	21	075	-	6000ZZx2	10	8		
		45W	45	55				6201ZZx2	12	10		
	27	60	60	67	22	-	200	6201ZZx2	12	10		
	32	45	45	55	27	100	250					
		65	65	74	27							
	37	55	55	67	32	-	300					
		65	65	74	32							
	45	70	70	80	40	150	-	6202ZZx2	15	11		
	49	60	60	67	44	-	400					
		70	70	80	44							
	58	60	60	67	53		500					
	59	70	70	80	54	200	-					

Ordering Example

Center Bearing: Part Number - D — AFBD9 - 20

Both Sides Bearing: Part Number - Nominal — AFBD11 - 15

For Bearing Dimension Details, see P.989, 991.
For Retaining Ring Dimension Details, see P.2-265

Idlers / Idler Shafts

Plastic

Idler Plastic Type

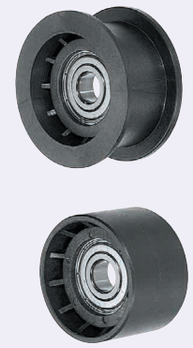

RoHS10

TPBSN (Flanged Idler)

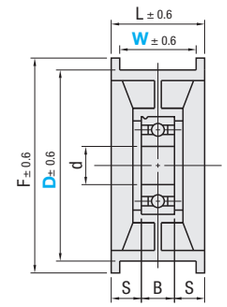

TPCFN (Flat Idler)

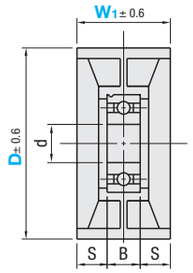

Operating Ambient Temp.: 80°C or lower * Bearing Accuracy: JIS B 1514 Class 0 M Material: Glass Reinforced Nylon (Engineered Plastic)

Part Number Type	D	TPBSN W	TPCFN W1	F	L	S	Bearing Dimensions No.	d	B	Applicable Idler Shaft	TPBSN Unit Price 1 ~ 10 pc(s).	TPBSN Volume Discount Rate 11~30 pcs.	TPCFN Unit Price 1 ~ 10 pc(s).	TPCFN Volume Discount Rate 11~30 pcs.
TPBSN TPCFN	38	15	18	42	18	4.5	6200ZZ	10	9	WS010S				
	40	20	26	48	26	8	6201ZZ	12	10	WS116S, WS122S				
	45		25	50	25	7	6202ZZ	15	11	WS216S				
	46			52		7.5	6201ZZ	12	10	WS112S, WS116S				
	50	25	31	62	31	10.5				WS116S, WS122S				
	60	30	-	66	36	13							-	-
	70	28	-	80	35	12	6202ZZ	15	11	WS216S, WS222S				

For orders larger than indicated quantity, please request a quotation.

Idler Shafts

RoHS10

WS

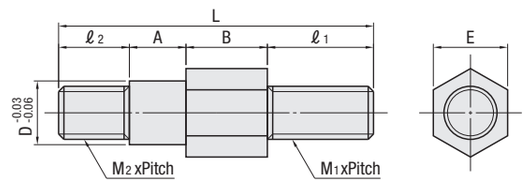

For idler shafts of different sizes, refer to cantilever shafts (P.881~906).

M Material: S45C Equivalent
S Surface Treatment: Black Oxide
A Accessory: Nut 2 pcs., Spring Washer 2 pcs.

Part Number		A	B	D	ℓ1	M1xPitch	ℓ2	M2xPitch	E	L	Unit Price 1 ~ 10 pc(s).	Volume Discount Rate 11~30 pcs.
WS	010S	8.5	10	10	17	M10x1.5	12	M8x1.25	14	47.5		
	112S	9.5	12	12	20		14	M10x1.5		55.5		
	116S		16							59.5		
	122S		22							65.5		
	216S	10.5	16	15					17	60.5		
	222S		22							66.5		

For orders larger than indicated quantity, please request a quotation.

Ordering Example

Part Number - W(W1)

TPCFN50 - 31

WS222S