[High Precision] Dovetail Slide, Rack & Pinion
Square

Features: Square Dovetail Slide Z-Axis Stages with 18mm travel per knob rotation. Suitable for smooth long distance moves.

Z Axis, Square

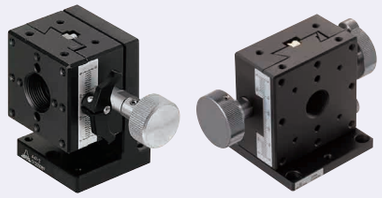

X-Axis P.1911
XY-Axis P.1940

RoHS 10

ZFG25

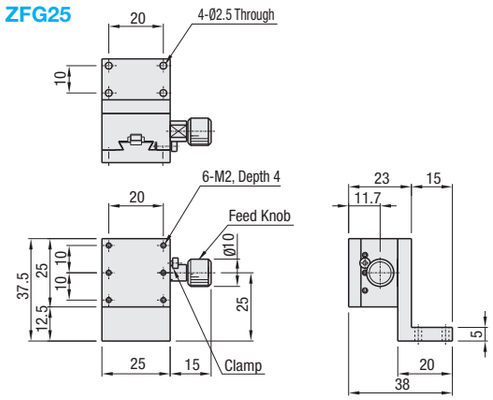

ZFG40

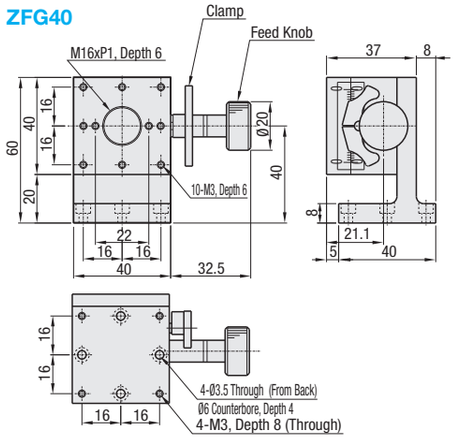

ZFG60

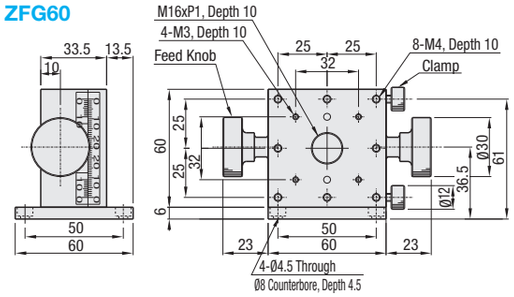

Vernier scale of ZFG25 will be on the opposite side of the clamp mount side.

Part Number	Material		Surface Treatment	
	Main Body	Bracket	Main Body	Bracket
ZFG25	Low Cadmium Brass	Aluminum Alloy	Black Fluororesin Treatment	Black Anodize
ZFG40	Aluminum Alloy		Black Anodize	
ZFG60				

Part Number Type	No.	Stage Surface (mm)	Travel Distance (mm)	Travel per Rotation (mm)	Load Capacity (N)	Travel Accuracy Straightness	Weight (kg)	Accessory (4 pcs.) Type M-L	Unit Price
ZFG	25	25x25	±5	17	6.9	30μm	0.11	SCB2-8	
	40	40x40	±10	20	14.7	20μm	0.23	SCB3-8	
	60	60x60	±20	18	19.6	30μm	0.60	SCB4-6	

Resolution (Vernier Scale Indication): 0.1mm/division

For orders larger than indicated quantity, please request a quotation.

Ordering Example

Part Number
ZFG40

Tips: Lever Clamp 3D View

Some models are equipped with "Lever Clamps" as shown below.
The standard clamp knobs are small in diameter and may require significant forces for sufficient clamping.
The wing-shaped lever clamp can be operated with an index finger and the thumb with little effort.
Please note that the actual clamping force obtained is the same as the standard clamps.
The lever clamps can not be removed due to its construction.

Alterations

Part Number	-	(R)
ZFG40	-	R

See the CAD data for details.

Alteration	Feed Knob Position Change (Left / Right Reversed)
Spec.	ZFG25 ZFG40 ZFG60 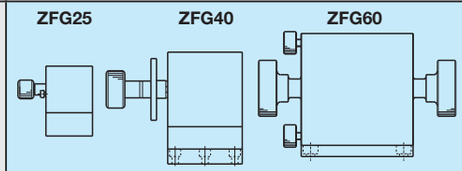
Code	R

Clamp Screw	Holding Force	Features	Caution
Standard Clamp	Equivalent	Economical, Space Saving	Small Knob
Lever Clamp		Good Operability	Limited to Some Models only

Lever Clamp Models:
XFG40 (P.1911)
XYFG40 (P.1940)
ZFG40 (P.1957)
XZFG40 (P.1992)
XYZFG40 (P.1995)
XWGSR40 (P.1925)
XWGSR60 (P.1925)
XWGSR90 (P.1925)

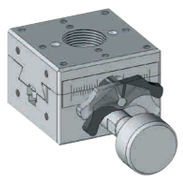

[High Precision] Dovetail Slide, Rack & Pinion
Rectangular, Reinforced Clamp

Features: Feed knob shaft is directly clamped for improved position holding performance compared to ZWG on **P.1954**.

Z Axis, Reinforced Clamp

X-Axis P.1906
XY-Axis P.1940

ZWGCL40

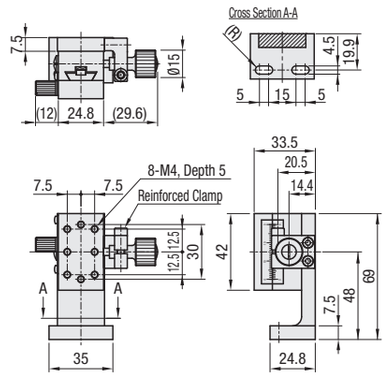

ZWGCL60

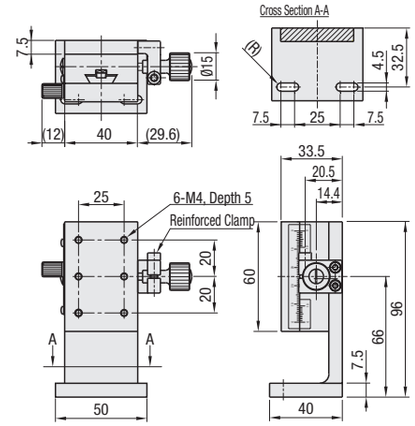

ZWGCL90

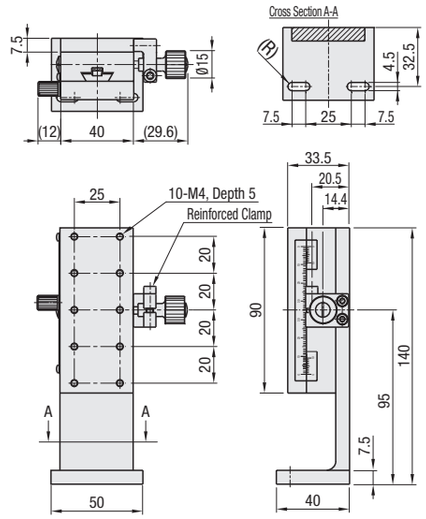

Example **Clamp Reinforcing Method**

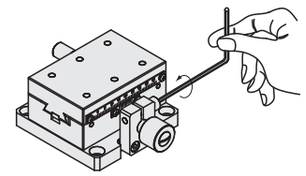

Retention by only the reinforced clamp is not sufficient to obtain zero backlash. Using with a clamp screw is recommended.

M Material: Aluminum Alloy S Surface Treatment: Black Anodize

Part Number Type	A	Stage Surface (mm)	Travel Distance (mm)	Load Capacity (N)	Travel Accuracy Straightness (μm)	Weight (kg)	Accessory (2 pcs.)	Unit Price
ZWGCL	40	24.8x42	±12	14.7	30	0.23	CBST4-12	
	60	40x60	±21	19.6		0.38		
	90	40x90	±35			0.51		

Resolution (Vernier Scale Indication): 0.1mm/division

Knob Cover HDCVR15 (Sold Separately): Ø15 knob can be increased in diameter by installing the cover. P.2004

For orders larger than indicated quantity, please request a quotation.

Ordering Example

Part Number
ZWGCL60