[High Precision] Rotary Cross Roller Bearing

Stainless Steel / Through Hole

[Manual Units] Rotary Tables

■**Features:** Stainless steel material used has improved rigidity over aluminum alloy rotary stages.

■Stainless Steel

RoHS10

RPGS60

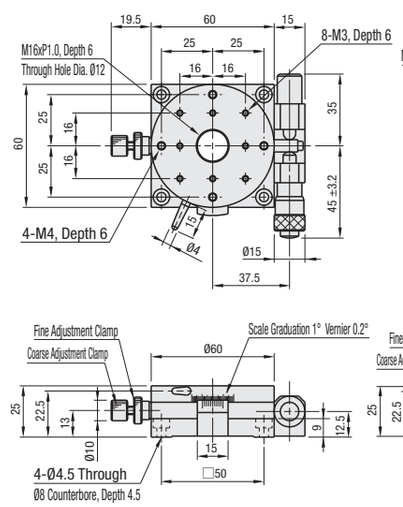

RPGS85

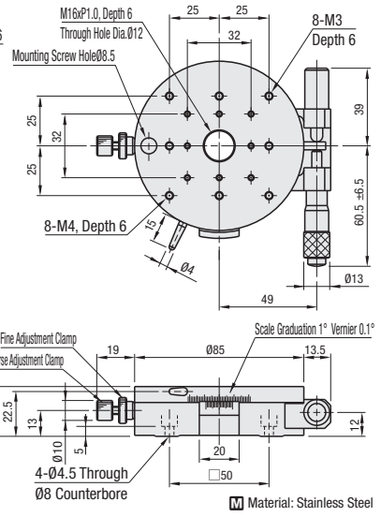

M Material: Stainless Steel

■**Features:** There is a through hole in the center of the stage allowing passages of laser, wiring and etc.

■Through Hole

RoHS10

RPGT100

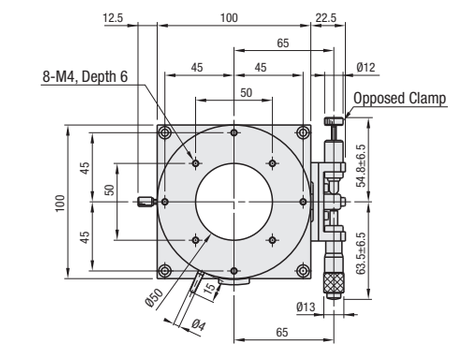

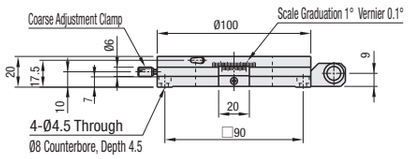

M Material: Aluminum Alloy
S Surface Treatment: Black Anodize

Part Number Type	No.	Stage Surface (mm)	Travel Distance	Resolution Vernier	Resolution Micrometer	Load Capacity (N) Horizontal	Eccentricity (mm)	Weight (kg)	Accessory (4 pcs.) TypeM-L	Unit Price 1 ~ 4 pc(s).
RPGS	60	Ø60	Coarse 360°Fine ±5°	0.2°	≈55"/Scale Graduation	49.0	0.05	0.58	SCB4-8	
	85	Ø85		0.1°	≈42"/Scale Graduation	58.8		0.97	SCB4-10	
RPGT	100	Ø100	Coarse 360°Fine ±5°	0.1°	≈32"/Scale Graduation	58.8	0.05	0.45	SCB4-6	

Knob Cover HDCVR13 (Sold Separately): Ø13 micrometer knob can be increased in diameter by installing the cover. P.2004

Extension Cover HDEXT13 (Sold Separately): Ø13 micrometer head knob can be extended. P.2004

Ordering Example

Part Number
RPGS60

Alterations

Part Number	-	(NR)
RPGS60	-	NR

Mounting dimensions of micrometer head and clamp are different from those of standard products.
See the CAD data for details.

Alteration	Micrometer Position
Spec.	Side Mount - Right/ Left Reversed 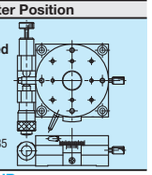 Not applicable to RPGS85
Code	NR

■**Features:** Units best suited for simplified positioning. Easy positioning in 30-degree increments using the plunger.

■Rotary Tables

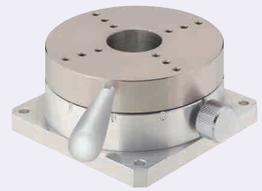

KUS

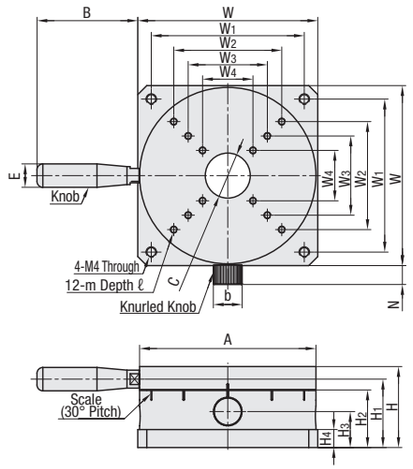

M Material: S45C
S Surface Treatment: Electroless Nickel Plating
Knob : **GRMSN (P.2-1150)**
Knurled Knob : **NOBA (P.2-1160)**

Through Hole C is not applicable to KUS50.

Part Number Type	No.	Stage Surface (mm) A	W	W_1	W_2	W_3	W_4	m	C	Base (mm) M	ℓ	H	H_1	H_2	H_3	H_4	Knob (mm) B	E	Knurled Knob (mm) N	b
KUS	50	Ø48	50	40	27	18	9	M4	-	M5	6	34	28	22	13	5	44	Ø10	11.5	Ø12
	100	Ø98	100	85	60	44	28	M4	Ø25	M6	8	45	38	32	20	10	56	Ø13	10.5	Ø16
	200	Ø198	200	175	124	94	64	M5	Ø70	M8	10	70	61	52.5	32	12	80	Ø20	14.5	Ø30

Part Number Type	No.	Stage Surface (mm)	Number of Indexed Positions	Indexing Angle	Load Capacity N{kgf}	Indexable Load (Reference Values) N{kgf}	Travel Accuracy Eccentricity (mm)	Parallelism (mm)	Surface Runout (mm)	Weight (kg)	Unit Price 1 ~ 2 pc(s).
KUS	50	Ø48	12	30°±1°	980{100}	98{10}	0.1	0.2	0.1	0.34	
	100	Ø98			1470{150}	196{20}				1.64	
	200	Ø198			1960{200}	294{30}				8.70	

Still usable when exceeding the indexable loads but plunger indexing will not work.

Ordering Example

Part Number
KUS100

Example

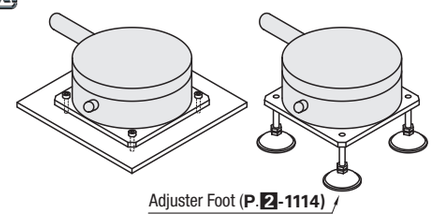

Adjuster Foot (**P.2-1114**)

■Rotary Table Mounting Orientation

Care must be taken for installations shown on the right.

No.	Inverted Mounting	Vertical Side Mounting
50	○	○
100	△	○
200	△	△

○: Usable, though limitations apply for loads and moments.
△: Performance may be seriously affected depending on application.
Make sure to take precaution against load from falling if failure occurs in this application.

• Vertical Side Mounting

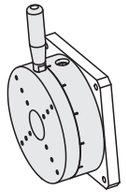
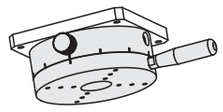
• Inverted Mounting