Manual Units
Elevator Type

Features: Units suited for up-and-down movements. Simple vertical positioning is possible.

Z-Axis, Elevator Type

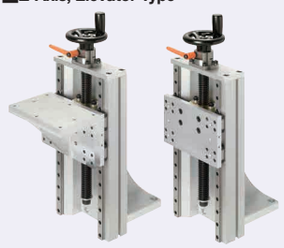

KUL

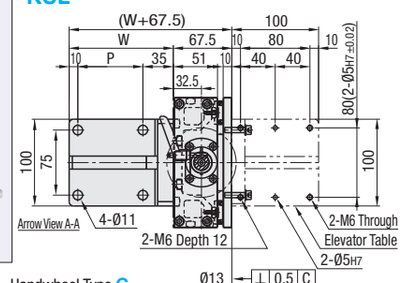

Components

Parts	Base	Table	Elevator Table	Angle Plate
M Material	Aluminum Alloy	Aluminum Alloy	Aluminum Alloy	Aluminum Alloy
S Surface Treatment	Clear Anodize	Clear Anodize	Clear Anodize	Clear Anodize

Parts	Lead Screw	Lead Screw Nut	Nut Bracket	Side Plate
M Material	S45C	Brass	Aluminum Alloy	Aluminum Alloy
S Surface Treatment	Black Oxide	-	Clear Anodize	Clear Anodize

Handwheel Type A

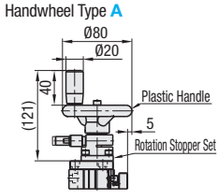

Handwheel Type B

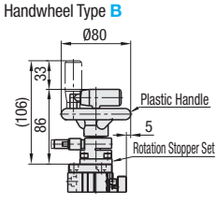

Handwheel Type C

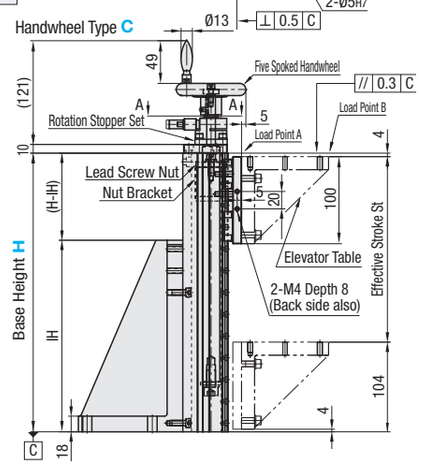

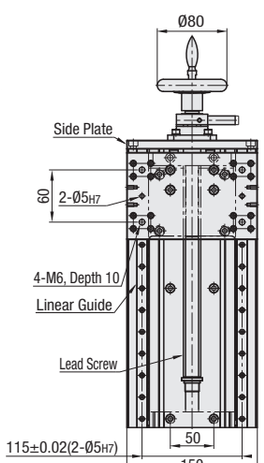

Part Number Type	Part Number No.	Handwheel Type	Elevator Table Selection	Base Height H (mm)	Effective Stroke St(mm)	Lead Screw Thread Dia.	Lead Screw Lead	Allowable Load (N) When Load Applied to Point A	Allowable Load (N) When Load Applied to Point B	Allowable Moment (N·m) Ma	Allowable Moment (N·m) Mb	Allowable Moment (N·m) Mc	W	P	IH	Mass (kg) Handwheel Type A	Mass (kg) Handwheel Type B	Mass (kg) Handwheel Type C
KUL	20	A Plastic Handle B Plastic Offset Handwheel - Folding Type C Five Spoked Handwheel	Not Specified (w/) N (w/o)	170	62	20	4	294	270	43	43	81	120	75	170	6.1	6.1	6.4
				220	112										220	6.8	6.8	7.1
				320	212											7.9	7.9	8.2
				370	262											8.5	8.5	8.8
				420	312								150	105	350	10.3	10.3	10.6
				470	362											10.8	10.8	11.1

Ordering Example

Part Number	-	Handwheel Type	-	Elevator Table	-	H	
KUL20	-	A			-	320	(w/ Elevator Table)
KUL20	-	A	-	N	-	320	(w/o Elevator Table)

Part Number Type	Part Number No.	Handwheel Type	Unit Price 1 ~ 2 pc(s). H=170	H=220	H=320	H=370	H=420	H=470
KUL	20	A						
		B						
		C						

Required Torque, Required Turning Force

Part Number Type	Part Number No.	Required Torque (N·m)	Required Turning Force (N)
KUL	20	0.861	33.112

*Torque and turning force required at max. load capacity.
*Turning force is the force that rotates the handwheel.

Accuracy

Type	Parallelism (mm)	Backlash (mm)
KUL	0.15	0.3

*Parallelism is the degree of running parallelism for dimension B against dimension A. (See the diagram below.)
*Backlash is not a guaranteed value but reference value.

Turning Force Fig.

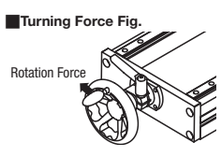

Moment Diagram

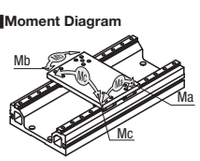

Parallelism Fig.

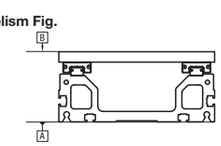

Manual Units
Elevator Type with Position Indicator

Features: Units suited for up-and-down movements. Simple vertical positioning is possible.

Z-Axis, Elevator Type

KULDP

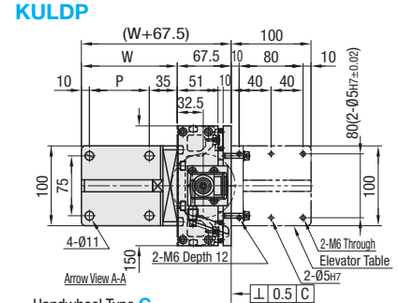

Components

Parts	Base	Table	Elevator Table	Angle Plate
M Material	Aluminum Alloy	Aluminum Alloy	Aluminum Alloy	Aluminum Alloy
S Surface Treatment	Clear Anodize	Clear Anodize	Clear Anodize	Clear Anodize

Parts	Lead Screw	Lead Screw Nut	Nut Bracket	Side Plate
M Material	S45C	Brass	Aluminum Alloy	Aluminum Alloy
S Surface Treatment	Black Oxide	-	Clear Anodize	Clear Anodize

Handwheel Type A

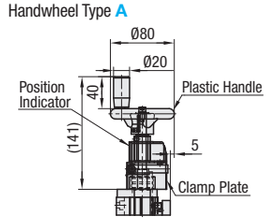

Handwheel Type B

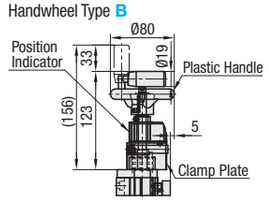

Handwheel Type C

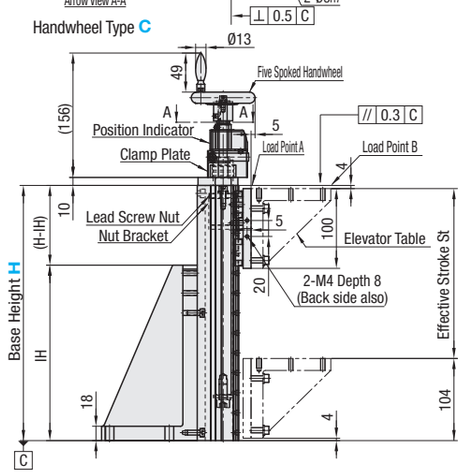

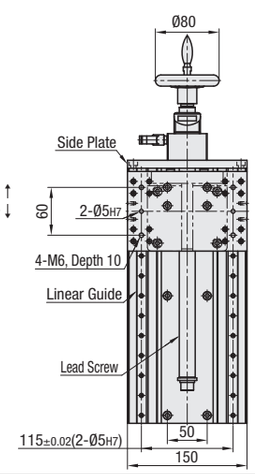

Part Number Type	Part Number No.	Handwheel Type	Elevator Table Selection	Base Height H (mm)	Effective Stroke St(mm)	Lead Screw Thread Dia.	Lead Screw Lead	Allowable Load (N) When Load Applied to Point A	Allowable Load (N) When Load Applied to Point B	Allowable Moment (N·m) Ma	Allowable Moment (N·m) Mb	Allowable Moment (N·m) Mc	W	P	IH	Mass (kg) Handwheel Type A	Mass (kg) Handwheel Type B	Mass (kg) Handwheel Type C
KULDP	20	A Plastic Handle B Plastic Offset Handwheel - Folding Type C Five Spoked Handwheel	Not Specified (w/) N (w/o)	170	62	20	4	294	270	43	43	81	120	75	170	6.3	6.3	6.6
				220	112										220	7.2	7.2	7.5
				320	212											8.3	8.3	8.6
				370	262											8.9	8.9	9.2
				420	312								150	105	350	10.6	10.6	10.9
				470	362											11.1	11.1	11.4

The rotational speed at start-up of position indicator should not exceed 1/3 of maximum rotational speed (RPM).
The maximum rotational speed is 75 (RPM).

Ordering Example

Part Number	-	Handwheel Type	-	Elevator Table	-	H	
KULDP20	-	A			-	320	(w/ Elevator Table)
KULDP20	-	A	-	N	-	320	(w/o Elevator Table)

Part Number Type	Part Number No.	Handwheel Type	Unit Price 1 ~ 2 pc(s). H=170	H=220	H=320	H=370	H=420	H=470
KULDP	20	A						
		B						
		C						

Required Torque, Required Turning Force

Part Number Type	Part Number No.	Required Torque (N·m)	Required Turning Force (N)
KULDP	20	0.861	33.112

*Torque and turning force required at max. load capacity.
*Turning force is the force that rotates the handwheel.

Accuracy

Type	Parallelism (mm)	Backlash (mm)
KULDP	0.15	0.3

*Parallelism is the degree of running parallelism for dimension B against dimension A. (See the diagram below.)
*Backlash is not a guaranteed value but reference value.

Turning Force Fig.

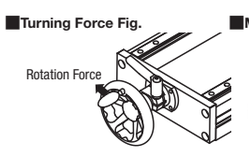

Moment Diagram

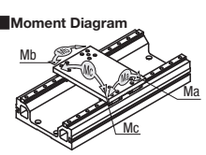
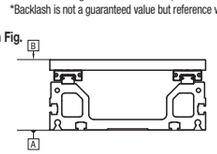
Parallelism Fig.