Device Stands

Square Flanged, Through Hole Type

Features: Smaller vertical dimension enables mounting in narrow spaces.

Sets (Posts + Brackets)

Bracket only

RoHS10

Sets (Posts + Brackets)

Type: Square Flanged, Solid	Type: Square Flanged, Hollow	Type: Square Flanged, Dowel Holes, Solid	Type: Square Flanged, Dowel Holes, Hollow	Post: M Material / H Hardness	Post: S Surface Treatment	Bracket: M Material	Bracket: S Surface Treatment	A Accessory: Solid	A Accessory: Hollow
ASTN	ASTA	ASPN	ASPA	S45C Equivalent Induction Hardened	-	FC250	Black oxide or Phosphate Conversion Coat	Set Screw Hex Socket Head Screw	Set Screw Hex Socket Head Screw Cap (P.2143)
MASTN	MASTA	MASPN	MASPA	S45C Equivalent	Electroless Nickel Plating				
KASTN	KASTA	KASPN	KASPA		Black Oxide				
SASTN	SASTA	SASPN	SASPA	SUS304	-				
ASTNM	ASTAM	-	-	S45C Equivalent Induction Hardened	Electroless Nickel Plating	FC250	Electroless Nickel Plating		
MASTNM	MASTAM			S45C Equivalent					
SASTNM	SASTAM			SUS304	-				

Bracket only

Type: No Dowel Hole	Type: With Dowel Holes	M Material	S Surface Treatment	A Accessory: No Dowel Hole	A Accessory: With Dowel Holes
ASTF	ASPF	FC250	Black oxide or Phosphate Conversion Coat	Set Screw	Set Screw Dowel Pin (SUJ2)
ASTFM	-		Electroless Nickel Plating		

* Case Induction Hardened (Post): 58HRC ~, Depth 1.0 ~ 1.5
* Dowel Hole Type includes dowel pins.
* There may be no electroless nickel plating and black oxide at ends and grooves of posts.
* For Hex Socket Head Cap Screws, a black oxide bracket matches a black oxide screw, and an electroless nickel plating bracket matches a trivalent chromate screw.

• Sets (Posts + Brackets) • Bracket only

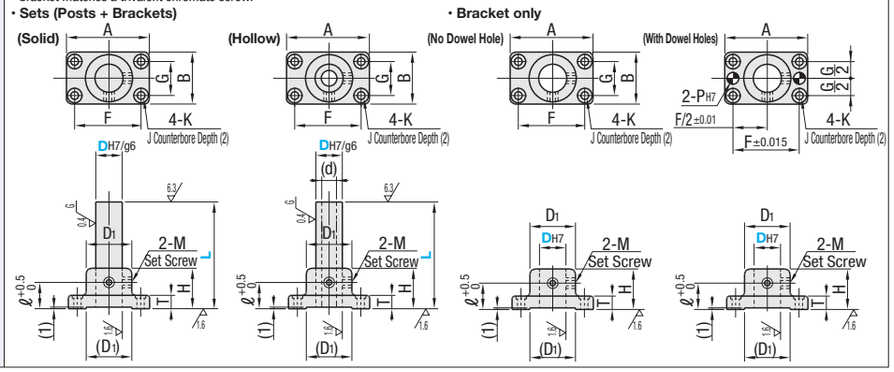

Part Number: Type	Dg6	L 1mm Increment	A	B	F	G	D1	H	T	ℓ	K	J	M	(d)	Bracket with Dowel Holes: PH7	Tolerance	Included Dowel Pin (2 pcs.) Tolerance m6	A Accessories Hex Socket Head Cap Screws (Available as Set Only)
Set (Solid) ASTN MASTN KASTN SASTN ASTNM MASTNM SASTNM (Hollow) ASTA MASTA KASTA SASTA ASTAM MASTAM SASTAM (Rods with Dowel Holes) ASPN MASPN KASPN SASPN (Pipe with Dowel Holes) ASPA MASPA KASPA SASPA	10 (-0.005 -0.014)	50~250	56	30	40	14	26	35	12	18	4.5	11	M4	6	-	-	-	M4-20x4 pcs.
	12 (-0.006 -0.017)	50~300	62	36	44	18	28				5.5	13						M5-20x4 pcs.
	15	75~350	70	40	50	20	31	40		20	6.6	15	M5	10				M6-25x4 pcs.
	20 (-0.007 -0.020)	75~400	80	50	60	30	40	45	12	25	6.6	15	M5	11.7	6	+0.012 0	MSTM6-20	M6-25x4 pcs.
	25	75~450	100	60	75	36	45	50		30	9	18	M6	15.2	8	+0.015 0	MSTM8-20	M8-25x4 pcs.
	30	100~450	106		80		50	60						16.0				
Separate Item Bracket only ASTF ASTFM / Bracket only with Dowel Holes ASPF	35 (-0.009 -0.025)	125~500	118	80	90	40	55	70	15	40	11	20	M8	20.1	10	+0.015 0	MSTM10-30	M10-35x4 pcs.
	40	150~500	125		95		60	80						22.7				
	50	200~600	140	100	106	50	70	100		50	14	24	M10	30.8				M12-35x4 pcs.

Bracket ASPF with Dowel Holes is available from D20. For available sizes of the brackets, refer to the price list.

Part Number - L
ASTN40 - 400
ASTF20

Square Flanged Set

D	L	Unit Price: Solid ASTN	MASTN	KASTN	SASTN	ASTNM	MASTNM	SASTNM	Hollow ASTA	MASTA	KASTA	SASTA	ASTAM	MASTAM	SASTAM
10	50~150														
	151~250														
12	50~150														
	151~300														
15	75~200														
	201~350														
20	75~200														
	201~400														
25	75~200														
	201~450														
30	100~200														
	201~450														
35	125~300														
	301~500														
40	150~300														
	301~500														
50	200~300														
	301~600														

Alterations Part Number - L - (BH)
ASTA25 - 400 - BH

Alteration	Code	Spec.
Mounting Holes Enlarged (d1, D2)	BH	Enlarges mounting holes for fine-tuning. Ordering Code BH. Not available for Dowel Hole Type. Counterbore Depth is 2mm. 4 screws and 4 washers are included.

D	Included Screw	Adj. Range	d1	D2	Included Washer (P.2-113) Black Oxide	Electroless Nickel Plating
10	M4	±1	6	13	WSSB10-4-2	WSSM10-4-2
12	M5		7	15	WSSB12-5-2	WSSM12-5-2
15	M6	±1.5	9	18	WSSB14-6-3	WSSM14-6-3
20	M8	±2	10	20	WSSB16-8-3	WSSM16-8-3
25, 30			12	22		
35, 40	M10	±2.5	15	28	WSSB20-10-3	WSSM20-10-3
50	M12	±3	18	32	WSSB25-12-5	WSSM25-12-5

Bracket only

DH7	Tolerance	Unit Price: ASTF	ASTFM	ASPF
10	+0.015 0			-
12	+0.018 0			-
15				-
20	+0.021 0			
25				
30				
35	+0.025 0			
40				
50				

Device Stands

Square Flanged, Slotted Hole Type

Features: Slotted holes enable fine adjustments when mounting.

Sets (Posts + Brackets)

Bracket only

RoHS10

Sets (Posts + Brackets)

Type: Horizontal Adjustment, Solid	Horizontal Adjustment, Hollow	Vertical Adjustment, Solid	Vertical Adjustment, Hollow	Post: M Material / H Hardness	Post: S Surface Treatment	Bracket: M Material	Bracket: S Surface Treatment	A Accessory: Solid	A Accessory: Hollow
ASTX	ASPX	ASTY	ASPY	S45C Equivalent Induction Hardened	-	FC250	Black oxide or Phosphate Conversion Coat	Set Screw Hex Socket Head Screw Washer	Set Screw Hex Socket Head Screw Washer Cap (P.2143)
AQTX	AQPX	AQTY	AQPY	S45C Equivalent	Electroless Nickel Plating				
AMTX	AMPX	AMTY	AMPY	S45C Equivalent Induction Hardened	Electroless Nickel Plating	FC250	Electroless Nickel Plating		
APTX	APPX	APTY	APPY	S45C Equivalent					
ACTX	ACPX	ACTY	ACPY	SUS304	-				

Bracket only

Type: Horizontal Adjustment	Vertical Adjustment	M Material	S Surface Treatment	A Accessory
ABFX	ABFY	FC250	Black oxide or Phosphate Conversion Coat	Set Screw
AMFX	AMFY		Electroless Nickel Plating	

* Case Induction Hardened (Post): 58HRC ~, Depth 1.0 ~ 1.5
* There may be no electroless nickel plating at ends and grooves of posts.
* For Hex Socket Head Cap Screws, a black oxide bracket matches a black oxide screw, and an electroless nickel plating bracket matches a trivalent chromate screw.
Surface treatment may not be applied to the inside of the slotted holes. The mounting pitch differs from the Square Flanged (P.2149).

• Sets (Posts + Brackets) • Bracket only

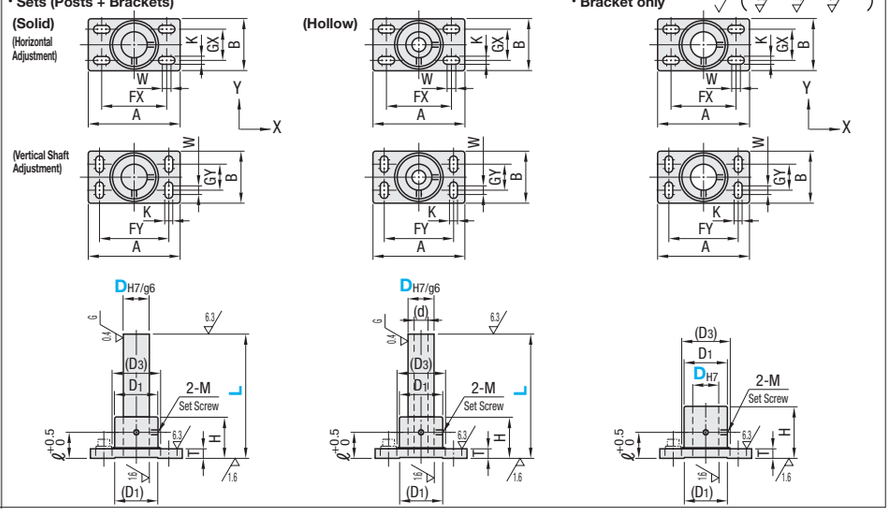

Part Number: Type	Dg6	L 1mm Increment	Adj. Range	A	B	FX	FY	GX	GY	K	W	D1	(D3)	H	T	ℓ	M	(d)	A Accessories Hex Socket Head Cap Screws (Available as Set Only)
Set Horizontal Adjustment (Solid) ASTX AQTX AMTX APTX ACTX (Hollow) ASPX AQPX AMPX APPX ACPX / Bracket only Horizontal Adjustment ABFX AMFX	10 (-0.005 -0.014)	50~250	±2.5	56	30	40	40	14	14	4.5	5	26	28	35	11	18	M4	6.0	M4-20x4 pcs.
	12 (-0.006 -0.017)	50~300		62	36	44	44	18	18	5.5		28	30	35					M5-20x4 pcs.
	15	75~350	±3	70	40	50	50	20	20	6.6	6	31	33	40		20	M5	10.0	M6-25x4 pcs.
	20 (-0.007 -0.020)	75~400	±5	80	50	56	60	35	25	6.6	10	40	43	45	11	25	M5	11.7	M6-25x4 pcs.
	25	75~450		100	60	70	75	36	30	9		45	52	50		30	M6	15.2	M8-25x4 pcs.
	30	100~450		106		75	80					50	56	60				16.0	
Vertical Adjustment (Solid) ASTY AQTY AMTY APTY ACTY (Hollow) ASPY AQPY AMPY APPY ACPY / Vertical Adjustment ABFY AMFY	35 (-0.009 -0.025)	125~500	±7.5	118	80	80	90	50	40	11	15	55	60	70	14	40	M8	20.1	M10-35x4 pcs.
	40	150~500		125		88	95					60	66	80				22.7	
	50	200~600	±10	140	100	95	106	70	50	14	20	70	77	100		50	M10	30.8	M12-35x4 pcs.

For available sizes of the brackets, refer to the price list.

Ordering Example Part Number - L
ASPX30 - 400
ABFY20

Sets (Posts + Brackets)

D	L	Unit Price: Solid ASTX ASTY	AQTX AQTY	AMTX AMTY	APTX APTY	ACTX ACTY	Hollow ASPX ASPY	AQPX AQPY	AMPX AMPY	APPX APPY	ACPX ACPY
10	50~150										
	151~250										
12	50~150										
	151~300										
15	75~200										
	201~350										
20	75~200										
	201~400										
25	75~200										
	201~450										
30	100~200										
	201~450										
35	125~300										
	301~500										
40	150~300										
	301~500										
50	200~300										
	301~600										

Bracket only

DH7	Tolerance	Unit Price: ABFX	ABFY	AMFX	AMFY
10	+0.015 0			-	-
12	+0.018 0				
15					-
20	+0.021 0				
25					
30					
35	+0.025 0				
40					
50					