Device Stands
Side Mounting, Compact

Features: More compact than the Side Mounting Type on the next page with an average 36% reduced footprint.

Sets (Posts + Brackets)

Bracket only

Sets (Posts + Brackets)

Type		Post		Bracket		Accessory	
Solid	Hollow	M Material H Hardness	S Surface Treatment	M Material	S Surface Treatment	Solid	Hollow
CCTN	CCTA	S45C Equivalent Induction Hardened	-	FC250	Black oxide or Phosphate Conversion Coat	Set Screw Hex Socket Head Cap Screws	Set Screw Hex Socket Head Cap Screws Cap (P.2143)
MCCTN	MCCTA	S45C Equivalent	Electroless Nickel Plating				
MCCTNM	MCCTAM	S45C Equivalent	Electroless Nickel Plating	FC250	Electroless Nickel Plating		

* Case Induction Hardened (Post): 58HRC ~, Depth 1.0 ~ 1.5
* There may be no electroless nickel plating at ends and grooves of posts.

Bracket only

Type	M Material	S Surface Treatment	A Accessory
CCTF	FC250	Black oxide or Phosphate Conversion Coat	Set Screw
CCTFM		Electroless Nickel Plating	

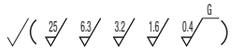

· Sets (Posts + Brackets)

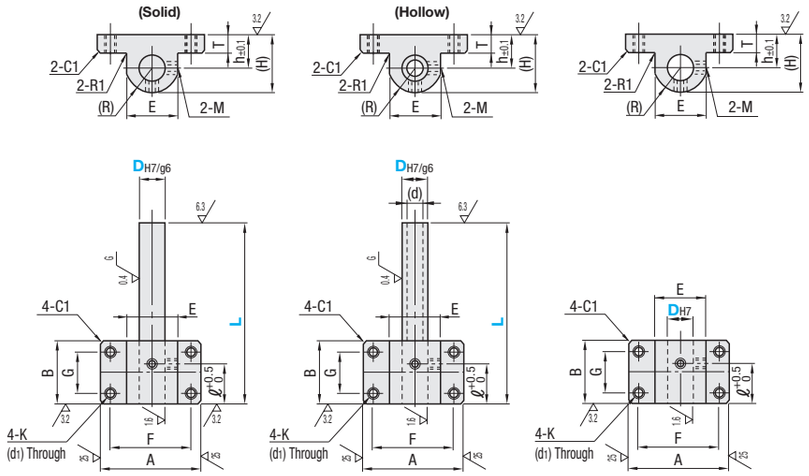

· Bracket only

Mounting holes are tapped for mounting on either front or back side.

Part Number Type		Dg6		L 1mm Increment	A	B	F	G	E	(H)	T	ℓ	h	K(d1)	(R)	M	(d)	Accessories Hex Socket Head Cap Screws (Available as Set Only)
Set	Bracket only	10	-0.005 -0.014	50~250	45	30	33	15	23	26	9	18	13	M5 (4.3)	13	M4	6.0	M5-20x4 pcs.
		12	-0.006 -0.017	50~300	48	33	35	18	25	28			14		14			
(Solid) CCTN MCCTN MCCTNM	(Hollow) CCTA MCCTA MCCTAM / CCTF CCTFM	15		75~350	55	35	40	20	28	31.5		20	16	M6 (5.2)	15.5	M5	10.0	M6-25x4 pcs.
		20	-0.007 -0.020	75~400	65	40	50	22	36	40	9	25	20		20	M5	11.7	M6-25x4 pcs.
		25		75~450	80	48	60	25	44	49.5		30	25	M8 (6.8)	24.5	M6	15.2	M8-25x4 pcs.
		30		100~450	85		65		49	55			28		27		16.0	
		35	-0.009 -0.025	125~500	105	60	80	30	59	65.5	12	40	33	M10 (8.6)	32.5	M8	20.1	M10-35x4 pcs.
		40		150~500	110		85		64	71			36		35		22.7	
		50		200~600	120	70	95	40	74	81		50	41		40	M10	30.8	

CCTFM is available up to D40.

Ordering Example: Part Number - L
CCTN20 - 350
CCTFM35

Sets (Posts + Brackets)

D	L	Unit Price Solid CCTN	MCCTN	MCCTNM	Hollow CCTA	MCCTA	MCCTAM
10	50~150						
	151~250						
12	50~150						
	151~300						
15	75~200						
	201~350						
20	75~200						
	201~400						
25	75~200						
	201~450						
30	100~200						
	201~450						
35	125~300						
	301~500						
40	150~300						
	301~500						
50	200~300						
	301~600						

Bracket only

D	Unit Price CCTF	CCTFM
10		
12		
15		
20		
25		
30		
35		
40		
50		-

Example

When D=20

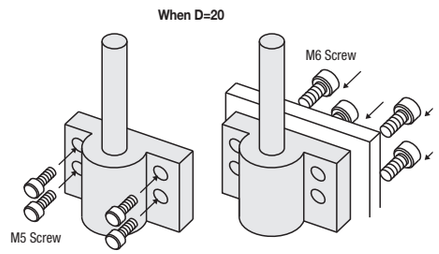

Fix to the mating side with M5 screws. (Use as through holes.)

Fix to the bracket side with M6 screws. (Use as tapped holes.)

Device Stands
Side Mounting, Standard

Features: Affordable Stands best for side mounting on transfer lines.

Sets (Posts + Brackets)

Bracket only

RoHS10

Sets (Posts + Brackets)

Type Side Mounting		Post		Bracket		Accessory	
Solid	Hollow	M Material H Hardness	S Surface Treatment	M Material	S Surface Treatment	Solid	Hollow
SSTN	SSTA	S45C Equivalent Induction Hardened	-	FC250	Black oxide or Phosphate Conversion Coat	Set Screw Hex Socket Head Screw	Set Screw Hex Socket Head Screw Cap (P.2143)
MSSTN	MSSTA	S45C Equivalent	Electroless Nickel Plating				
SSTNM	SSTAM	S45C Equivalent Induction Hardened	Electroless Nickel Plating	FC250	Electroless Nickel Plating		
MSSTNM	MSSTAM	S45C Equivalent					
SSSTNM	-	SUS304	-				

* Case Induction Hardened (Post): 58HRC ~, Depth 1.0 ~ 1.5
* There may be no electroless nickel plating at ends and grooves of posts.
* For Hex Socket Head Cap Screws, a black oxide bracket matches a black oxide screw, and an electroless nickel plating bracket matches a trivalent chromate screw.

Bracket only

Type	M Material	S Surface Treatment	A Accessory
SSTF	FC250	Black oxide or Phosphate Conversion Coat	Set Screw
SSTFM		Electroless Nickel Plating	

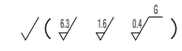

· Sets (Posts + Brackets)

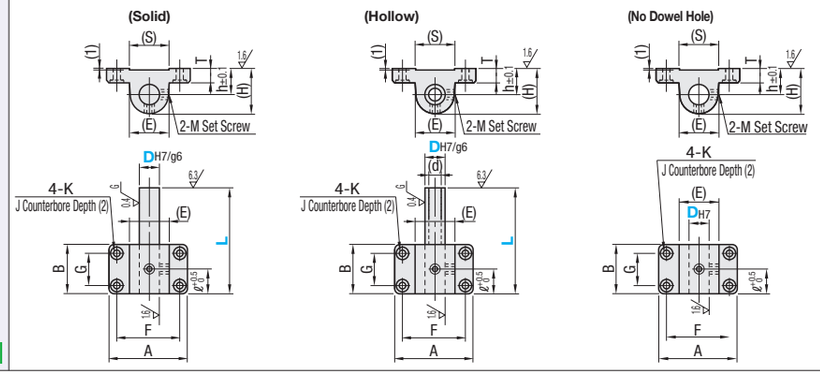

· Bracket only

Part Number Type		Dg6		L 1mm Increment	A	B	(E)	(S)	F	G	(H)	T	ℓ	h	K	(J)	M	(d)	Accessories Hex Socket Head Cap Screws (Available as Set Only)
Set	Bracket only	10	-0.005 -0.014	50~250	58	35	26	26	42	19	28	12	18	15	4.5	11	M4	6.0	M4-20x4 pcs.
		12	-0.006 -0.017	50~300	64	35	28	28	47	18	30			16	5.5	13			M5-20x4 pcs.
(Solid) SSTN MSSTN SSTNM MSSTNM SSSTNM	(Hollow) SSTA MSSTA SSTAM MSSTAM / SSTF SSTFM	15		75~350	72	40	31	31	52	20	33.5		20	18	6.6	15	M5	10.0	M6-25x4 pcs.
		20	-0.007 -0.020	75~400	82	45	40	40	62	25	42	12	25	22	6.6	15	M5	11.7	M6-25x4 pcs.
		25		75~450	100	60	49	49	75	36	51.5		30	27	9	18	M6	15.2	M8-25x4 pcs.
		30		100~450	106		54	54	80		57			30				16.0	
		35	-0.009 -0.025	125~500	118	80	65	65	90	40	67.5	15	40	35	11	20	M8	20.1	M10-35x4 pcs.
		40		150~500	125		70	70	95		73			38				22.7	
		50		200~600	140	100	80	80	106	50	83		50	43	14	24	M10	30.8	M12-35x4 pcs.

Ordering Example: Part Number - L
MSSTN30 - 300
SSTF20

Side Mounting Set

D	L	Unit Price Solid SSTN	MSSTN	SSTNM	MSSTNM	SSSTNM	Hollow SSTA	MSSTA	SSTAM	MSSTAM
10	50~150									
	151~250									
12	50~150									
	151~300									
15	75~200									
	201~350									
20	75~200									
	201~400									
25	75~200									
	201~450									
30	100~200									
	201~450									
35	125~300									
	301~500									
40	150~300									
	301~500									
50	200~300									
	301~600									

Bracket only

D	Unit Price SSTF	SSTFM
10		
12		
15		
20		
25		
30		
35		
40		
50		