Shafts

Shaft Ends Configurable

Type D Tol. g6	Type D Tol. h5	M Material	H Hardness	S Surface Treatment
FSFJ	FSFU	SUJ2 Equivalent	Effective Hardened Depth of Induction Hardening P.112	-
FSSFJ	FSSFU	SUS440C or 13Cr stainless		
FPSFJ	-	SUJ2 Equivalent	SUJ2 Equivalent 58HRC~	Hard Chrome Plating Plating Hardness: HV750 ~ Plating Thickness: 5μ or More ~
FPSSFJ	-	SUS440C or 13Cr stainless	SUS440C or 13Cr stainless 56HRC~	

(Y) dimensions need to be (Y)≤Dx50. (Y)≤1500
L Dimension Tolerance, Circularity, Straightness, Perpendicularity, Concentricity and Changes in Hardness P.111

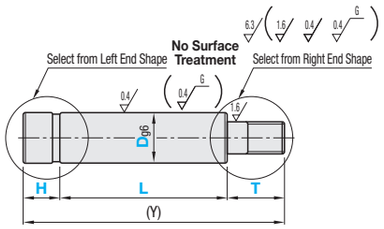

Left End Shape

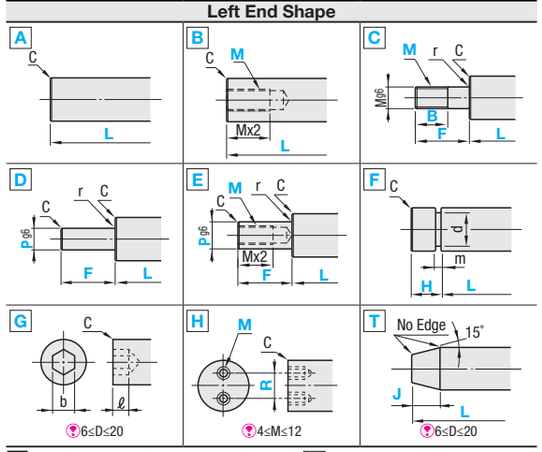

Right End Shape

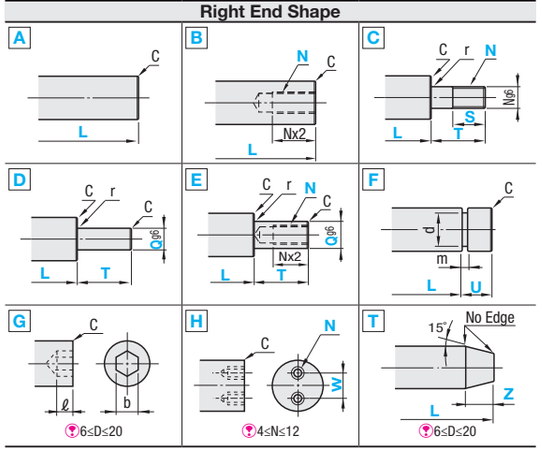

Machining Conditions

A No alteration condition for Shape

B
- When M3 ~ 8 M(N)≤D-3
- When M10 or 12 M(N)≤D-4
- When M16, 20 or 24 M(N)≤D-5
- When M30 M(N)≤D-6

L≥M(N)x4

C

D	r
6~30	0.3 or Less
31~50	0.5 or Less

Specify M(N) dimensions.
B, S≥Pitchx3 is required.

D

D	r
6~30	0.3 or Less
31~50	0.5 or Less

E

D	r
6~30	0.3 or Less
31~50	0.5 or Less

P(Q)≥M(N)+3

- When M3 ~ 8 M(N)≤P(Q)-3
- When M10 or 12 M(N)≤P(Q)-4
- When M16, 20 or 24 M(N)≤P(Q)-5
- When M30 M(N)≤P(Q)-6

F

D dimensions 31 and 38 can not be specified.

G

D	b	Hex Socket Depth Ø
6, 7	2.5	3.5
8, 9	3	4.5
10	4	6
12~15	5	7.5
16~19	6	9
20	8	12

H

D≥16
D≥M+4+R
D≥N+4+W
R≥M+3
W≥N+3

Tap Depth
Mx2
Nx2

T

D-J(Z)tan15°x2≥2
(Tip diameter Ø2 or More)
- L requires L-J(Z)≥20.
- When both ends are in T shape, L-(J+Z)≥20 is required.

When only one end requires alteration, select Shape A for the opposite end.
G and H will not be symmetrical when applied to both ends of the shaft.
When D=P or D=N is selected for shaft shape C, B(S) needs to be specified as F=B(T=S). However, L, F, and T dimensions have manufacturing priority and B(S) dimension will be F(T)-(Pitch x2).

Part Number			Selection	0.5mm Increment		1mm Increment					Selection	C
Type	Left End Shape	Right End Shape	D	L	F, T	B, S	H, U	P, Q	R, W	J, Z	M, N (Coarse)	
(D Tol. g6) FSFJ FSSFJ FPSFJ FPSSFJ (D Tol. h5) FSFU FSSFU	A B C D E F G H T	A B C D E F G H T	6 17 31 7 18 32 8 19 35 9 20 38 10 22 40 12 24 45 13 25 50 14 26 15 28 16 30	20.0~1500.0 (L≤Dx50)	2≤F≤Px5 2≤F≤Mx5 2≤T≤Qx5 2≤T≤Nx5	2≤B≤Mx3 2≤S≤Nx3 B≤F-2 S≤T-2 (When M, N≤6) B≤F-3 S≤T-3 (When M, N≤8, 10) B≤F-5 S≤T-5 (When M, N≥12)	2≤H, U (When D=6) 3≤H, U (When 6<D≤10) 4≤H, U (When 10<D≤20) 5≤H, U (When 20<D) H, U<L/2	D/3≤P, Q<D	D≥M+4+R D≥N+4+W R≥M+3 W≥N+3	D J,Z 6, 7 5~7 8, 9 5~10 10 5~14 12 5~18 13, 14 5~20 15 10~24 16, 17 10~25 18, 19 10~28 20 10~32	3 4 5 6 8 10 12 16 20 24 30	0.2 or less when D-Q (P, M, N)≤4, 0.5 or less when D<20, 1.0 or less when D≥20

Ordering Example

Part Number: Type (Left End) (Right End) - D - L - F - M - B - T - N - S - H - U - P - Q - R - W - J - Z

FSFJ A C - D12 - L100 - T30 - N6 - S12

Alterations
For details, please see Alteration Overview on P.113.
Applicable to LKC, SC, WSC, PMC, PMS, QMC and QMS only.

Type	D	Material Unit Price Left End: Shape A Right End: Shape A												Shaft End Alteration Unit Price							
		Min. L ~ 50	50.5~100	100.5~150	150.5~200	200.5~300	300.5~400	400.5~500	500.5~600	600.5~800	800.5~1000	1000.5~1200	1200.5~1500	B	C	D	E	F	G	H	T
FSFJ FSFU	6						-	-	-	-	-	-	-							-	
	7							-	-	-	-	-	-							-	
	8							-	-	-	-	-	-							-	
	9								-	-	-	-	-							-	
	10								-	-	-	-	-							-	
	12									-	-	-	-							-	
	13										-	-	-							-	
	14, 15										-	-	-							-	
	16										-	-	-								
	17, 18, 19											-	-								
	20											-	-								
	22, 24												-						-		-
	25																		-		-
	26, 28																		-		-
	30																		-		-
	31, 32																		-		-
	35																		-		-
	38																		-		-
	40																		-		-
	45																		-		-
	50	-																	-		-
FSSFJ FSSFU	6						-	-	-	-	-	-	-							-	
	7							-	-	-	-	-	-							-	
	8							-	-	-	-	-	-							-	
	9								-	-	-	-	-							-	
	10								-	-	-	-	-							-	
	12									-	-	-	-							-	
	13										-	-	-							-	
	14, 15										-	-	-							-	
	16										-	-	-								
	17, 18, 19											-	-								
	20											-	-								
	22, 24												-						-		-
	25																		-		-
	26, 28																		-		-
	30																		-		-
	31, 32																		-		-
	35																		-		-
	38																		-		-
	40																		-		-
	45																		-		-
	50	-																	-		-
FPSFJ	6						-	-	-	-	-	-	-							-	
	7							-	-	-	-	-	-							-	
	8							-	-	-	-	-	-							-	
	9								-	-	-	-	-							-	
	10								-	-	-	-	-							-	
	12									-	-	-	-							-	
	13										-	-	-							-	
	14, 15										-	-	-							-	
	16										-	-	-								
	17, 18, 19											-	-								
	20											-	-								
	22, 24												-						-		-
	25																		-		-
	26, 28																		-		-
	30																		-		-
	31, 32																		-		-
	35																		-		-
	38																		-		-
	40																		-		-
	45																		-		-
	50	-																	-		-
FPSSFJ	6						-	-	-	-	-	-	-							-	
	7							-	-	-	-	-	-							-	
	8							-	-	-	-	-	-							-	
	9								-	-	-	-	-							-	
	10								-	-	-	-	-							-	
	12									-	-	-	-							-	
	13										-	-	-							-	
	14, 15										-	-	-							-	
	16										-	-	-								
	17, 18, 19											-	-								
	20											-	-								
	22, 24												-						-		-
	25																		-		-
	26, 28																		-		-
	30																		-		-
	31, 32																		-		-
	35																		-		-
	38																		-		-
	40																		-		-
	45																		-		-
	50	-																	-		-