Shaft Supports T-Shaped Set Screw (Machined)

Standard / Wide

Features: Dowel Hole Type enables easy positioning in assembly.

Standard

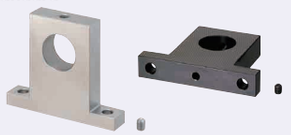

Assembly Examples P.232

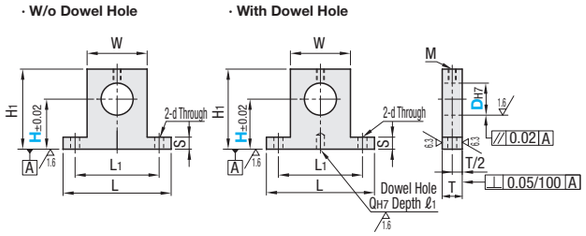

W/o Dowel Hole		With Dowel Hole	M Material	S Surface Treatment	A Accessory
Height H Selectable	Height H Configurable	Height H Selectable			
SHTB	SHTBH	SHTBK	S45C Equivalent	Black Oxide	Hex Socket Set Screw 1 pc.
SHTM	SHTMH	SHTMK		Electroless Nickel Plating	Hex Socket Set Screw 1 pc. (SUS)
SHTS	SHTSH	SHTSK	SUS304	-	
SHTA	SHTAH	-	Aluminum Alloy	Clear Anodize	

Part Number Type	D	H Height H Selectable Type	H Height H Configurable Type 0.1mm Increment	L	H1	T	S	W	Set Screw M	L1	d	Q	ℓ1	Unit Price W/o Dowel Hole Height H Selectable Type SHTB	SHTM	SHTS	SHTA	Height H Configurable Type SHTBH	SHTMH	SHTSH	SHTAH	With Dowel Hole Height H Selectable Type SHTBK	SHTMK	SHTSK
W/o Dowel Hole Height H Selectable SHTB SHTM SHTS SHTA	3	10 15 20	10.0~20.0	26	H+5	8	4	10	M3	18	3.5	-	-									-	-	-
	4				H+6																	-	-	-
	5	15 20 25	15.0~25.0		H+7																	-	-	-
	6				H+8																	-	-	-
	8	(10) 15 20 25 30 40	10.0~40.0	42	H+9	10	6	18	M4	30	4.5	4	5											
	10	(10) 15 20 25 30 40	15.0~40.0		H+10																			
	12				H+11																			
	13	20 25 30			H+12																			
Height H Configurable SHTBH SHTMH SHTSH SHTAH	15	(15) 20 25 30 40	15.0~40.0	54	H+15			30		42														
	16																							
	18	25 30 40 50 60	25.0~60.0	67	H+18	16	8	35	M6	50	6.6	5	7											
	20	(15) 20 25 30 40 50 60	20.0~60.0																					
With Dowel Hole SHTBK SHTMK SHTSK (8≤D≤40)	25	(20) 25 30 40 50 60	25.0~60.0		H+20																			
	30			85	H+23	20	10	45		65	9													
	35	(25) 30 50 60	30.0~60.0		H+25																			
	40	(25) 30 40 60 80	30.0~80.0	100	H+30			60		80														
	50	-	40.0~80.0	125	H+38		15	75		100	14			-	-	-	-					-	-	-

H dimensions in ( ) are applicable to w/o Dowel Hole Type only. Dowel Hole Type is applicable to D dimensions 8 ~ 40 only.

Features: T dimension is thicker in comparison to Standard Type (I.D. D x1 ~ 1.5). Aluminum products are suitable for weight saving.

Wide

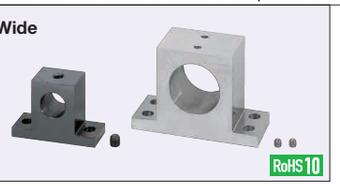

Type	M Material	S Surface Treatment	A Accessory
SHTBN	S45C Equivalent	Black Oxide	Hex Socket Set Screw 1 pc.
SHTMN		Electroless Nickel Plating	Hex Socket Set Screw 1 pc. (SUS)
SHTSN	SUS304	-	

D dimensions 30 ~ 50 come with 2 screws.

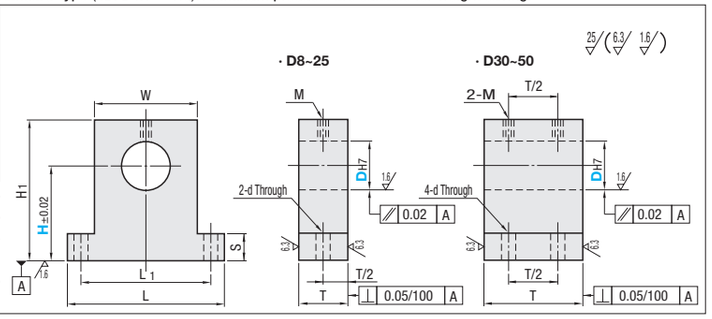

Part Number Type	D	H Selection	L	H1	T	S	W	Set Screw M	L1	d	Unit Price SHTBN	SHTMN	SHTSN
SHTBN SHTMN SHTSN	8	10 15 20 25 30 40	42	H+9	15	6	18	M6	30	6.6			
	10	10 15 20 25 30 40 50 60		H+10									
	12	10 15 20 25 30 40 50 60		H+11	18								
	13	15 20 25 30 40 50 60		H+12									
	15	15 20 25 30 40 50 60	54	H+15	20		30		42				
	16	15 20 25 30 40 50 60		H+15									
	20	20 25 30 40 50 60 80	67	H+18	25	8	35	M8	50	9			
	25	20 25 30 40 50 60 80		H+20	30								
	30	25 30 40 50 60 80	85	H+23	35	10	45		65	6.6			
	35	25 30 40 50 60 80		H+25									
	40	30 40 50 60 80	100	H+30	40		60		80	9			
	50	40 50 60 80	125	H+38	50	15	75		100	11			

Ordering Example

Part Number	-	H
SHTB8	-	25
SHTMH15	-	25.6
SHTBN35	-	50

Shaft Supports T-Shaped Slit (Machined)

Standard / Wide

Features: Dowel Hole Type enables easy positioning in assembly. High locating repeatability on assembly for maintenance.

Standard

Assembly Examples P.232

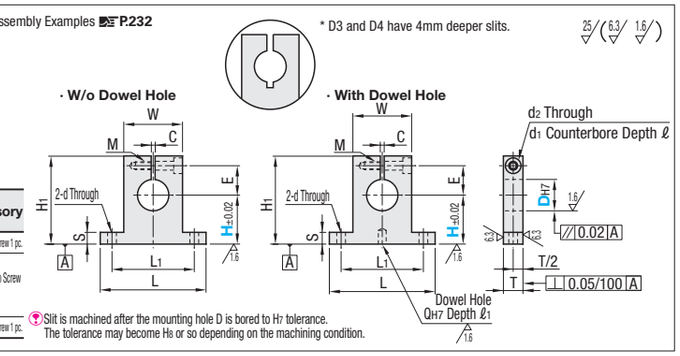

W/o Dowel Hole		With Dowel Hole	M Material	S Surface Treatment	A Accessory
Height H Selectable	Height H Configurable	Height H Selectable			
SHSTB	SHSTBH	SHSTBK	S45C Equivalent	Black Oxide	Hex Socket Head Cap Screw 1 pc.
SHSTM	SHSTMH	SHSTMK		Electroless Nickel Plating	Hex Socket Head Cap Screw 1 pc. (SUS)
SHSTS	SHSTSH	SHSTSK	SUS304	-	
SHSTA	SHSTAH	-	Aluminum Alloy	Clear Anodize	
SHSTD	SHSTDH	-	A6063	Black Anodize	Hex Socket Head Cap Screw 1 pc.

Slit is machined after the mounting hole D is bored to H7 tolerance. The tolerance may become H8 or so depending on the machining condition.

Part Number Type	D	H Height H Selectable Type	H Height H Configurable Type 0.1mm Increment	L	H1	T	S	W	L1	d	E	Tightening Screw M	d2	d1	ℓ	C	Q	ℓ1	Unit Price W/o Dowel Hole Height H Selectable Type SHSTB	SHSTM	SHSTS	SHSTA	SHSTD	Height H Configurable Type SHSTBH	SHSTMH	SHSTSH	SHSTAH	SHSTDH	With Dowel Hole Height H Selectable Type SHSTBK	SHSTMK	SHSTSK
W/o Dowel Hole Height H Selectable SHSTB SHSTM SHSTS SHSTA SHSTD	3	10 15 20	10.0~20.0	26	H+11	8	4	10	18	3.5	7	M3 Through	3.5	6.5	3.5	1.5	-	-												-	-
	4																													-	-
	5	10 15 20 25	10.0~25.0		H+12						8																			-	-
	6																													-	-
	8	(10) 15 20 25 30 40	10.0~40.0	42	H+16	10	6	18	30	4.5	11	M4 Through	4.5	8	4.5	2	4	5													
	10	(10) 15 20 25 30	10.0~30.0																												
	12				H+18						13																				
Height H Configurable SHSTBH SHSTMH SHSTSH SHSTAH SHSTDH	13	(15) 20 25 30	15.0~30.0	54	H+20				30	42																					
	15										15	M4 Depth 8																			
	16	(15) 20 25 30 40	15.0~40.0																												
	18	20 25 30 40 50 60	20.0~60.0	67	H+26	16	8	35	50	6.6	18	M6 Through	6.6	11	6.5		5	7													
	20																														
With Dowel Hole SHSTBK SHSTMK SHSTSK (8≤D≤50)	25	(20) 25 30 40 50 60	20.0~60.0		H+28						21																				
	30	25 30 40 50 60	25.0~60.0	85	H+33	20	10	45	65	9	24	M8 Depth 16	9	14	9	3															
	35	(25) 30 40 50 60	25.0~60.0		H+36						27																				
	40	30 40 50 60 80	30.0~80.0	100	H+38			60	80		29																				
	50	40 50 60 80	40.0~80.0	125	H+51	25	15	75	100	14	38	M12 Depth 24	14	20	13																

H dimensions in ( ) are applicable to w/o Dowel Hole Type only. Dowel Hole Type is applicable to D dimensions 8 ~ 50 only.

Wide

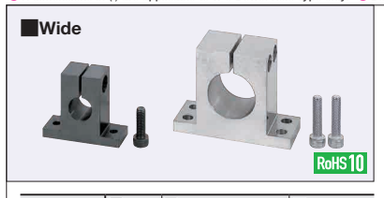

Type	M Material	S Surface Treatment	A Accessory
SHSTBN	S45C Equivalent	Black Oxide	Hex Socket Head Cap Screw 1 pc.
SHSTMN		Electroless Nickel Plating	Hex Socket Head Cap Screw 1 pc. (SUS)
SHSTSN	SUS304	-	
SHSTAN	A5052	Clear Anodize	

D dimensions 30 ~ 50 come with 2 screws.

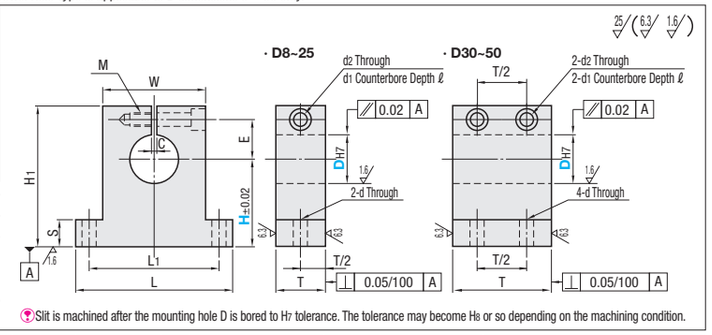

Slit is machined after the mounting hole D is bored to H7 tolerance. The tolerance may become H8 or so depending on the machining condition.

Part Number Type	D	H Selection	L	H1	T	S	W	L1	d	E	Tightening Screw M	d2	d1	ℓ	C	Unit Price SHSTBN	SHSTMN	SHSTSN	SHSTAN
SHSTBN SHSTMN SHSTSN SHSTAN	8	10 15 20 25 30 40	48	H+18	15	6	24	36	6.6	11	M6 Through	6.6	11	6.5	2				
	10	10 15 20 25 30 40 50 60		H+19						12									
	12	10 15 20 25 30 40 50 60		H+21	18					14									
	13	15 20 25 30 40 50 60																	
	15	15 20 25 30 40 50 60	54	H+23	20		30	42		16									
	16	15 20 25 30 40 50 60																	
	20	20 25 30 40 50 60 80	67	H+29	25	8	35	50	9	19	M8 Through	9	14	9					
	25	20 25 30 40 50 60 80		H+31	30					22									
	30	25 30 40 50 60 80	85	H+33	35	10	45	65	6.6	24					3				
	35	25 30 40 50 60 80		H+36						27									
	40	30 40 50 60 80	100	H+38	40		60	80	9	29	M8 Depth 16								
	50	40 50 60 80	125	H+51	50	15	75	100	11	38	M12 Depth 24	14	20	13					

Ordering Example

Part Number	-	H
SHSTM8	-	25
SHSTMH8	-	25.6
SHSTMN20	-	30