Motor Adapter Plates for Single Axis Actuator LX30, Motor Adapter Centering Tools

Note: Note that the Motor Adapter protrudes beyond the rail at * marked area.

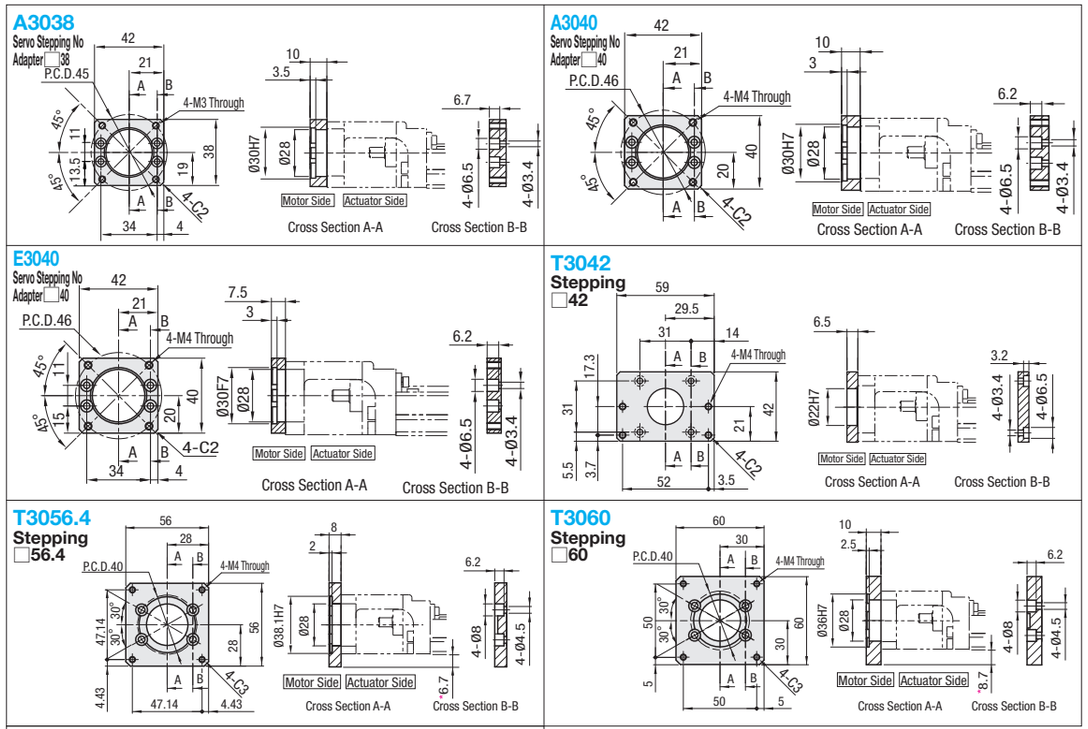

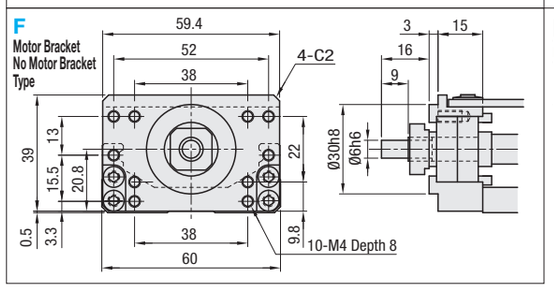

■Stepping Motor Application Table

Part Number	Flange Size	Manufacturer	Product Number	Type	Recommended Coupling
T3042	□42	Oriental Motor	PK24*	2-phase	SCXW21 (P.1076) SCPW21 (P.1076) CPDW19 (P.1075)
			RKS54*/PK54*	5-phase	
			AS46/ASC46/AR46	α- Step	
T3060	□60		RKS56*/PK56*	5-phase	
			AS6*/ASC66/AR66	α- Step	
T3056.4	□56.4		PK26*	2-phase	
		NEMA standards	NEMA23	-	CPDW19(P.1075)

NEMA standards is a set of standards stipulated by National Electrical Manufacturers Association of United States.
Not compatible with geared motors made by Oriental Motor.

■Servo Motor Application Table

Part Number	Flange Size	Manufacturer	Product Number	Wattage	Recommended Coupling
A3038	□38	Panasonic	MSMD5A/MSME5A	50W	SCXW21 (P.1076) SCPW21 (P.1076) CPDW19 (P.1075)
			MSMD01*/MSME01*	100W	
A3040	□40	Yasukawa Electric Corporation	SGMJV-A5	50W	
			SGMAH-A5		
			SGMAH-01	100W	
		Mitsubishi Electric Corporation	HG-MR053	50W	
			HG-MR13	100W	
		Sanyo Denki Co., Ltd.	Q1AA04003D	30W	
			Q1AA04005D	50W	
			Q1AA04010D	100W	
		Omron Corporation	R88M-K05030	50W	
			R88M-K10030	100W	
		Keyence Corporation	MV-M05	50W	
			SV-M005		
			MV-M10	100W	
			SV-M010		
E3040	□40	SIEMENS	1FK7011-5	50W	CPDW25 (P.1075)
			1FK7015-5	100W	

Shaft insertion length into the coupling will be 1.15mm shorter on each side when used with Siemens motor.
Product numbers and specifications of motors are subject to change. Please check the manufactures' information.
Applicable motors and couplings are not limited to the above listed products. Please confirm each mounting dimension.

■Motor Adapter Centering Tools

RoHS10

JIGLX30

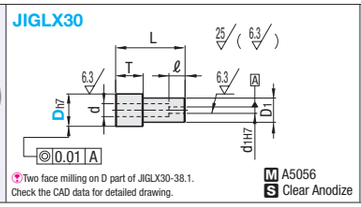

Two face milling on D part of JIGLX30-38.1. Check the CAD data for detailed drawing.

M A5056
S Clear Anodize

ex

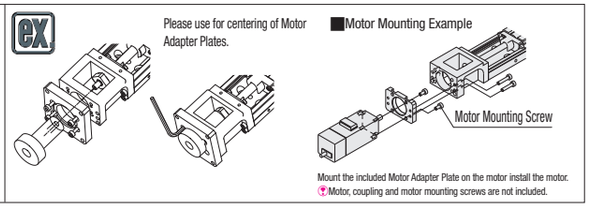

Mount the included Motor Adapter Plate on the motor install the motor.
Motor, coupling and motor mounting screws are not included.

Part Number	D	Applicable Adapter Plate	d	D1	d1	L	T	ℓ	Unit Price 1 ~ 5 pc(s).
JIGLX30	30	A3038/A3040	10	20	6	52.5	13	10	
	38.1	T3056.4				51	12		
	36	T3060				53			

For orders larger than indicated quantity, please check with WOS.

Ordering Example

Part Number	-	D
JIGLX30	-	30

Sensor Sets for Single Axis Actuators LX30 (Alterations)

Spec.Change Printed in Purple

■Proximity Sensor (SUNX) - Set Part Specification

LX Part Number	Code (□ is Sensor Qty.) *For L≤150, Max. 2 For L≥200, Max. 3	Sensor Type/Qty. GX-F12A (ON when near)	Sensor Type/Qty. GX-F12B (ON when away)	Sensor Rail: Rail (1 pc.)	Sensor Rail: Mounting Screw (Pitch +1 pc.)	Sensor (* Qty per Sensor Included): Sensor Mounting Screw (1 pc.)	Sensor: Mounting Nut (1 pc.)	Sensor Flag (1 pc.)	Sensor Flag: Sensor Flag Mounting Screw	Unit Price (L≤300) Sensor Qty. 1 pc.	2 pcs.	3 pcs.	Unit Price (L≥350) Sensor Qty. 1 pc.	2 pcs.	3 pcs.
LX30□□-B□	XA□	□ pc(s).	-	SENC3□H	SCB3-5	CBSST3-8	LBNR3	Dedicated	Flat Head Machine Screw M2.6-4 (1 pc.)						
	XB□	-	□ pc(s).												
LX30□□-S□	XAS□	□ pc(s).	-												
	XBS□	-	□ pc(s).												
LX30□□C-B□	FA□	□ pc(s).	-	SENAT3□H	SCB3-6				SCB3-6 (2 pcs.)						
	FB□	-	□ pc(s).												
LX30□□C-S□	FAS□	□ pc(s).	-												
	FBS□	-	□ pc(s).												
LX30□□-B□	XW1	1 pc.	1 pc.	SENC3□H	SCB3-5				Flat Head Machine Screw M2.6-4 (1 pc.)	-	-	-	-	-	-
	XW2		2 pcs.												
	XW3	2 pcs.	1 pc.												
LX30□□-S□	XWS1	1 pc.	1 pc.												
	XWS2		2 pcs.												
	XWS3	2 pcs.	1 pc.												
LX30□□C-B□	FW1	1 pc.	1 pc.	SENAT3□H	SCB3-6				SCB3-6 (2 pcs.)						
	FW2		2 pcs.												
	FW3	2 pcs.	1 pc.												
LX30□□C-S□	FWS1	1 pc.	1 pc.												
	FWS2		2 pcs.												
	FWS3	2 pcs.	1 pc.												

■Photo Sensor (SUNX) - Set Part Specification

LX Part Number	Code (□ is the number of pcs.) *For L≤150, Max. 2 For L≥200, Max. 3	Photo Sensor	Sensor Rail: Rail (1 pc.)	Sensor Rail: Mounting Screw (Pitch +1 pc.)	Sensor (* Qty per Sensor Included): Sensor Bracket	Bracket Mounting Screw Nut	Sensor Mounting Screw	Sensor Mounting Washer	Sensor Flag (1 pc.)	Sensor Flag Mounting Screw	Unit Price (L≤300) Sensor Qty. 1 pc.	2 pcs.	3 pcs.	Unit Price (L≥350) Sensor Qty. 1 pc.	2 pcs.	3 pcs.
LX30□□-B□	SP□	PM-L25	SENC3□H	SCB3-5	Dedicated	SCB3-5 (2 pcs.) LBNR3 (2 pcs.)	SCB3-6 (2 pcs.)	M2 Small Flat Washer (2 pcs.)	Dedicated	Flat Head Machine Screw M2.6-4 (1 pc.)						
LX30□□-S□	SPS□															
LX30□□C-B□	MP□		SENAT3□H	SCB3-6						SCB3-6 (2 pcs.)						
LX30□□C-S□	MPS□															

The Photo Sensor PM-L24 is to be discontinued and replaced by the next-generation product PM-L25 in April 2017.

■Photo Sensor (Omron) - Set Part Specification

LX Part Number	Code (□ is the number of pcs.) *For L≤150, Max. 2 For L≥200, Max. 3	Photo Sensor	Sensor Rail: Rail (1 pc.)	Sensor Rail: Mounting Screw (Pitch +1 pc.)	Sensor (* Qty per Sensor Included): Sensor Bracket	Bracket Mounting Screw Nut	Sensor Mounting Screw	Sensor Mounting Washer	Sensor Flag (1 pc.)	Sensor Flag Mounting Screw	Unit Price (L≤300) Sensor Qty. 1 pc.	2 pcs.	3 pcs.	Unit Price (L≥350) Sensor Qty. 1 pc.	2 pcs.	3 pcs.
LX30□□-B□	OP□	EE-SX911-R 1M	SENC3□H	SCB3-5	Dedicated	SCB3-5 (2 pcs.) LBNR3 (2 pcs.)	SCB3-6 (2 pcs.)	M3 Small Flat Washer (2 pcs.)	Dedicated	Flat Head Machine Screw M2.6-4 (1 pc.)						
LX30□□-S□	OPS□															
LX30□□C-B□	EP□		SENAT3□H	SCB3-6						SCB3-6 (2 pcs.)						
LX30□□C-S□	EPS□															

* Sensors are not sold separately.
EE-SX911-R1M is scheduled to change to EE-SX951-R1M from April 2015.

Alterations

Part Number	-	Block Qty.	-	Motor Adapter Plates	-	Base Length (L)	-	(Code)
LX3010	-	B1	-	A3040	-	600	-	XW1
LX3005	-	S1	-	A3040	-	600	-	SPS3

■Proximity Sensor Type Installation Drawings - SUNX

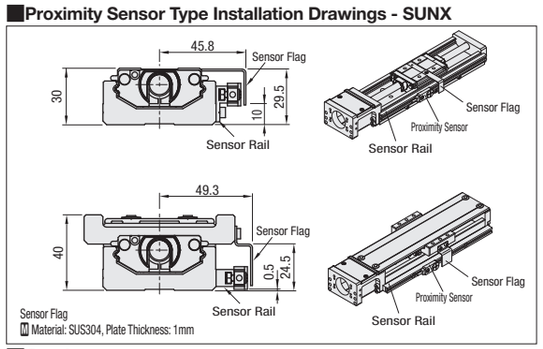

■Photo Sensor Type Installation Drawings - SUNX / Omron

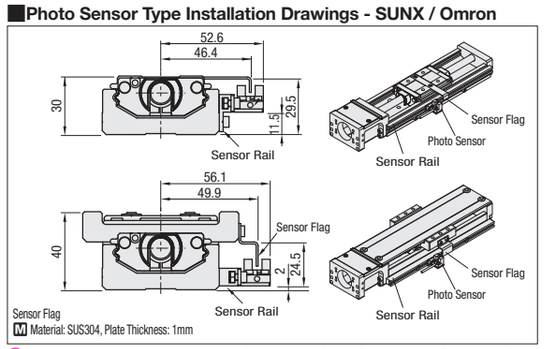

Please access each sensor manufacture's website for the specifications of sensors in use.

■Cautions

· Sensor set is shipped with LX Actuator. Assembly required.
· Please check for all included parts immediately after unpacking. Some small parts can be lost. Please handle the products with great care.