Configurable Plates - Extra Super Duralumin

A7075P (Aℓ-Zn-Mg Aluminum Alloy)

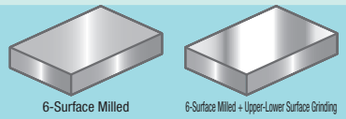

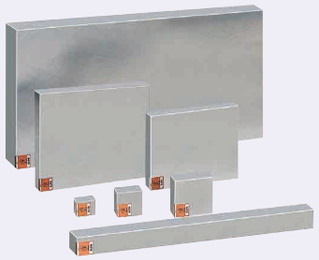

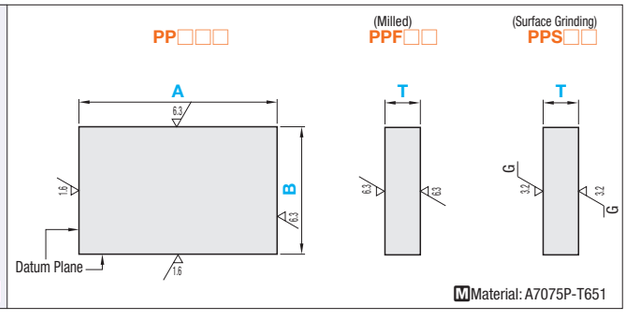

Part Number					0.5mm Increment		
Type		Upper-Lower Surface Finish	①Plate Thickness Tolerance Selection	②A, B Dimension Tolerance Selection	A	B	T
					A≥B		
Standard	PP	F (Milled) S (Surface Grinding)	P Q N M	P Q N M	25~ 500	10~ 300	5~ 50

①Plate Thickness Tolerance

Upper-Lower Surface Finish	A, B Length	P	Q	N	M
F (Milled)	550mm or Less	+0.1~+0.3	0~+0.2	±0.1	-0.2~0
	550.5mm or More	+0.1~+0.4	0~+0.3	±0.15	-0.3~0
S (Surface Grinding)		+0.1~+0.2	0~+0.1	±0.05	-0.1~0

②A, B Dimension Tolerance

Upper-Lower Surface Finish	A, B Length	P	Q	N	M
F (Milled) S (Surface Grinding)	250mm or Less	+0.1~+0.3	0~+0.2	±0.1	-0.2~0
	250.5mm or More	+0.1~+0.6	0~+0.5	±0.25	-0.5~0

■Precision Standards

(Max. Value)

Item		Upper-Lower Surface Finish F (Milled)	S (Surface Grinding)
Thickness Parallelism (per 100mm)	T3~ 6.5	0.05	0.025
	T7~ 12.5		0.03
	T13~ 15.5		0.05
	T16~ 20.5	0.07	0.07
	T21~ 50	0.1	0.1
Flatness (per 100mm)	T3~ 8.5	0.15	0.12
	T9~ 12.5	0.13	0.06
	T13~ 20.5	0.12	
	T21~ 50	0.1	
Perpendicularity of Datum Plane		0.015 per 100mm	
Circumference Chamfering	Standard	C0.3 or Less	

Ordering Example

Part Number									
Type	Upper-Lower Surface Finish	Plate Thickness Tolerance	A, B Dimension Tolerance	-	A	-	B	-	T
PP	F	Q	M	-	255	-	220	-	18

Alterations

Part Number - A - B - T -(CSC, CBC, CCA···etc.)

PPFNM - 300 - 280 - 20 - CSC

Alterations	Circumference Chamfering		Corner Cut
			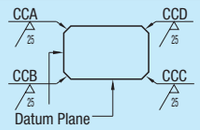
Code	CSC	(See below)	CCA, CCB, CCC, CCD
Spec.	Reduce the circumference chamfering dimension. Standard C0.3 or Less ··· C0.1 or Less Applicable to Standard Size only.	Increase the circumference chamfering dimension. Size / Standards / Modified Value / Code Standard / C0.3 or Less / C0.5~C1.0 / CBC	Cuts any corners. 1≤ Corner Cut ≤50: 1mm Increment C≤ A/2 , B/2 Ordering Code (Ex.)When the corners of A and D are cut by C5, ··· CCA5-CCD5 1mm Increment: 1~ 5, 6~10, 11~20, 21~30, 31~40, 41~50

(Ex.) For PPFQM-255-220-18

A Dimension x Area Unit Price = Price

Part Number	A	B \ T	5	5.5~6.5	7~10	10.5~15	15.5~20	20.5~25	25.5~30	30.5~35	35.5~40	40.5~45	45.5~50
PPF□□	25 ~ 50	10~19.5											
	50.5~ 75												
	75.5~ 100												
	100.5~ 250												
	25 ~ 50	20~50											
	50.5~ 75												
	75.5~ 100												
	100.5~ 250												
	50.5~ 75	50.5~75											
	75.5~ 100												
	100.5~ 200												
	200.5~ 500												
	75.5~ 100	75.5~100											
	100.5~ 200												
	200.5~ 300												
	300.5~ 500												
	100.5~ 250	100.5~125											
	250.5~ 500												
	125.5~ 300	125.5~150											
	300.5~ 500												
	150.5~ 300	150.5~160											
	300.5~ 500												
	160.5~ 300	160.5~200											
	300.5~ 500												
	200.5~ 350	200.5~250											
	350.5~ 500												
	250.5~ 500	250.5~300											

Part Number	A	B \ T	5, 6	7~10	10.5~15	15.5~20	20.5~25	25.5~30	30.5~35	35.5~40	40.5~45	45.5~50
PPS□□	25 ~ 50	10~19.5										
	50.5~ 75											
	75.5~ 100											
	100.5~ 250											
	25 ~ 50	20~50										
	50.5~ 75											
	75.5~ 100											
	100.5~ 250											
	50.5~ 75	50.5~75										
	75.5~ 100											
	100.5~ 200											
	200.5~ 500											
	75.5~ 100	75.5~100										
	100.5~ 200											
	200.5~ 300											
	300.5~ 500											
	100.5~ 250	100.5~125										
	250.5~ 500											
	125.5~ 300	125.5~150										
	300.5~ 500											
	150.5~ 300	150.5~160										
	300.5~ 500											
	160.5~ 300	160.5~200										
	300.5~ 500											
	200.5~ 350	200.5~250										
	350.5~ 500											
	250.5~ 500	250.5~300										

1mm Increment for T=5 ~ 7 of S (Surface)

Sizes larger than plate thickness 50 and precision tolerance are only available on "Material Shop 24 Website". For details, see **P.1697**.

* Except Surface Grinding